Installation and Service Instructions

for use by heating contractor

Vitodens 100-W
B1HE Series and B1KE Combi Series
Wall mounted gas-fired condensing boiler with
3.5 inch black/white display
On demand domestic Hot Water with Combi Boilers
For operation with natural gas or liquid propane gas

Heating input: 8.5 to 199 MBH
2.5 to 58.3 kW

VITODENS 100-W

Energy Verified

AHRI CERTIFIED® www.ahridirectory.org

Product may not be exactly as shown

IMPORTANT

Read and save these instructions for future reference.

6167 818 - 22 02/2026

Please file in Service Binder

Safety, Installation and Warranty Requirements

Please ensure that these instructions are read and understood before commencing installation. Failure to comply with the instructions listed below and details printed in this manual can cause product/property damage, severe personal injury, and/or loss of life. Ensure all requirements below are understood and fulfilled (including detailed information found in manual subsections).

- **Product documentation**
  Read all applicable documentation before commencing installation. Store documentation near boiler in a readily accessible location for reference in the future by service personnel.

  ▶*For a listing of applicable literature, please see section entitled "Important Regulatory and Safety Requirements".*

- **Warranty**
  Information contained in this and related product documentation must be read and followed. Failure to do so renders the warranty null and void.

- **Licensed professional heating contractor**
  The installation, adjustment, service and maintenance of this equipment must be performed by a licensed professional heating contractor.

  ▶*Please see section entitled "Important Regulatory and Installation Requirements".*

- **Contaminated air**
  Air contaminated by chemicals can cause by-products in the combustion process, which are poisonous to inhabitants and destructive to Viessmann equipment.

  ▶*For a listing of chemicals which cannot be stored in or near the boiler room, please see subsection entitled "Combustion Air Supply".*

- **Advice to owner**
  Once the installation work is complete, the heating contractor must familiarize the system operator/ ultimate owner with all equipment, as well as safety precautions/requirements, shutdown procedure, and the need for professional service annually before the heating season begins.

- **Carbon monoxide**
  Improper installation, adjustment, service and/or maintenance can cause flue products to flow into living space. Flue products contain poisonous carbon monoxide gas.

  ▶*For information pertaining to the proper installation, adjustment, service and maintenance of this equipment to avoid formation of carbon monoxide, please see instructions supplied with burner.*

- **Fresh air**
  This equipment requires fresh air for safe operation and must be installed ensuring provisions for adequate combustion and ventilation air exist.

  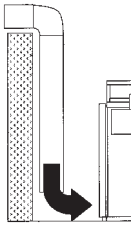

  ▶*For information pertaining to the fresh air requirements of this product, please see subsection entitled "Combustion Air Supply".*

- **Equipment venting**
  Never operate boiler without an installed venting system. An improper venting system can cause carbon monoxide poisoning.

  ▶*For information pertaining to venting and chimney requirements, please see section entitled "Venting Connection". All products of combustion must be safely vented to the outdoors.*

⚠ WARNING

Installers must follow local regulations with respect to installation of carbon monoxide detectors. Follow manufacturer's maintenance schedule of the boiler.

Index

Page

Safety

Safety, Installation and Warranty Requirements 2
Important Regulatory and Installation Requirements 5

General Information

About these Installation Instructions 6
Applicability 7
Mechanical Room 8
Product Information 9
System Examples 10
Fitting and Sealing Points 10

Dimensions

Minimum Clearances 10
Boiler Dimensions 11

Installation

Mounting the Boiler and Making Connections 13
Piping Connections 18
Neutralization Unit 21
DHW Tank Connection 22
Safety Valve 23
Flue Gas Connection 24
Electrical Connections 25
WiFi Operational Reliability and System Requirements ... 29
Closing the Junction Box 30
Fitting the Programming Unit and Front Panel 31
Adjusting pump Rate of Integral Pump 32
System Layout 1 33
System Layout 2 34
System Layout 3 35
System Layout 4 36
System Layout 5 37
System Layout 6 38
Boiler with Low Water Cut-off
(remote mounted, field supplied) 39

Commissioning

Commission the System with the Commissioning Assistant 40
Filling the Heating System 42
Checking All Connections on the Heating Water and DHW Sides for Leaks 44
Checking the Gas Type 44
Converting the Gas Type for Operation with LPG 45
Removing the Front Panel 45
Removing the Programming Unit to the Maintenance Position 46
Checking the Static Pressure and Supply Pressure 47
Function Sequenceand Possible Faults 48
Seal Test on Coaxial Flue System (annular gap check) 49

Index

Page

Service

Removing the Burner 50
Checking the Burner Gasket and Flame Body Assembly .. 51
Checking and Adjusting the Ignition and Ionization Electrodes 53
Checking the Flue Gas Flapper 53
Cleaning the Heating Surfaces 54
Check Condensate Drain / Cleaning the Siphon Trays 55
Installing the Burner 56
Checking the Neutralization System (if Installed) 57
Check the Flow Limiter (only for gas condensing combi boiler) 57
Checking the Expansion Tank (on site) **and System Pressure** 58
Checking the Safety Valve Function 58
Checking All Gas Equipment for Leaks at System Pressure 58
Fitting the Front Panel 58
Checking the Combustion Quality 59
Checking the CO_2 Content / Relay Tests 60
Clock Natural Gas Meter 60
Calling Up and Resetting the Maintenance Display 60

System Configuration (parameters)

Instructing the System User 61
Calling Up Parameters 61
General 62
Boiler 63
DHW 65

Diagnostics and Service Checks

Service Menu 67
Checking Outputs (actuator test) 67

Troubleshooting

Fault Display on the Programming Unit 69
Overview of Electronic Modules 71
Fault Messages 72
Repairs 82

Function Descriptions

Opening the Junction Box 89
Boiler Functions 91
DHW Heating 92
Increased DHW Hygiene 92
Call for Heat 92

Wiring Diagrams

Overview of the Modules 93
HMU Heat Management Unit 94
BCU Burner Control Unit 95
Wiring Panel 96
B1HE Models 85 / 120 / 150 / 199 97
B1KE Models 120 / 199 98

Maintenance Record

Service Reports 99

Specification

Technical Data 100

Parts

Parts List 103

Additional Information

Lighting and Operating Instructions 125

6167 818 - 22

Important Regulatory and Installation Requirements

Codes

The installation of this unit shall be in accordance with local codes or, in the absence of local codes, use CAN/CSA-B149.1 or .2 Installation Codes for Gas Burning Appliances for Canada. For U.S. installations use the National Fuel Gas Code ANSI Z223.1. Always use latest editions of codes.

In Canada all electrical wiring is to be done in accordance with the latest edition of CSA C22.1 Part 1 and/or local codes. In the U.S. use the National Electrical Code ANSI/NFPA 70. The heating contractor must also comply with both the Standard for Controls and Safety Devices for Automatically Fired Boilers, ANSI/ASME CSD-1, and the Installation Code for Hydronic Heating Systems, CSA B214 (latest edition), where required by the authority having jurisdiction.

Carbon Monoxide Detectors

The installer must verify that at least one carbon monoxide alarm has been installed within a residential living space or home following the alarm manufacturer's instructions and applicable codes before putting the appliance into operation.

▶ *Leave all literature at the installation site and advise the system operator/ultimate owner where the literature can be found. Contact Viessmann for additional copies.*

▶ *This product comes with several safety instruction labels attached. Do not remove!*
Contact Viessmann immediately if replacement labels are required.

Important Regulatory and Installation Requirements *(continued)*

Working on the equipment
The installation, adjustment, service, and maintenance of this boiler must be performed by a licensed professional heating contractor who is qualified and experienced in the installation, service, and maintenance of hot water boilers. There are no user serviceable parts on the boiler, burners, or control.

Ensure main power supply to equipment, the heating system, and all external controls has been deactivated. Close main gas supply valve. Take precautions in all instances to avoid accidental activation of power during service work.

▶ *The completeness and functionality of field supplied electrical controls and components must be verified by the heating contractor. This includes low water cutoffs, flow switches (if used), staging controls, pumps, motorized valves, air vents, thermostats, etc.*

Technical literature
Literature for the Vitodens boiler:
- Technical Data Manual
- Installation and Service Instructions
- Operating Instructions and User's Information Manual
- Vitodens Venting System Installation Instructions
- Quick Start Guide
- Instructions of other products utilized and installed
- Installation codes mentioned in this manual and as locally applicable

▶ *Leave all literature at the installation site and advise the system operator/ultimate owner where the literature can be found. Contact Viessmann for additional copies.*

▶ *This product comes with several safety instruction labels attached. Do not remove!*
Contact Viessmann immediately if replacement labels are required.

About these Installation Instructions

Take note of all symbols and notations intended to draw attention to potential hazards or important product information. These include "WARNING", "CAUTION", and "IMPORTANT". See below.

WARNING

Indicates an imminently hazardous situation which, if not avoided, could result in death, serious injury or substantial product/property damage.

▶ *Warnings draw your attention to the presence of potential hazards or important product information.*

CAUTION

Indicates an imminently hazardous situation which, if not avoided, may result in minor injury or product/ property damage.

▶ *Cautions draw your attention to the presence of potential hazards or important product information.*

IMPORTANT

▶ *Helpful hints for installation, operation or maintenance which pertain to the product.*

▶

▶ *This symbol indicates that additional, pertinent information is to be found.*

▶ *This symbol indicates that other instructions must be referenced.*

Applicability

IMPORTANT

The boiler serial number must be provided when ordering replacement parts. Both the 16-digit serial number bar code on the rating plate and the 12-digit ASME serial number correlate to each other. Providing either serial number is sufficient.

Model No.	Serial No.
B1HE - 85	7722772□□□□□□□□□□
B1HE - 120	7722773□□□□□□□□□□
B1HE - 150	7722774□□□□□□□□□□
B1HE - 199	7722775□□□□□□□□□□
B1KE - 120	7722776□□□□□□□□□□
B1KE - 199	7722777□□□□□□□□□□

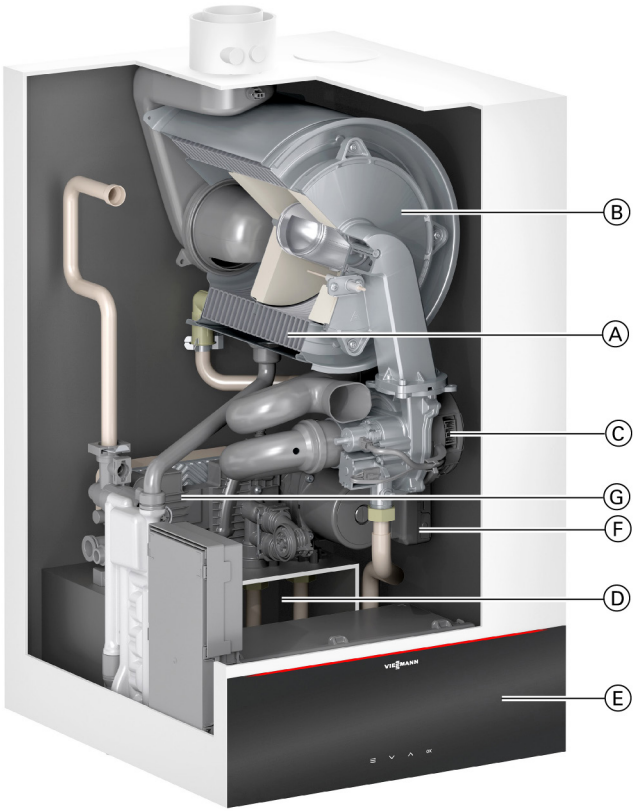

Boiler cross-section

Legend

Ⓐ Inox-Radial stainless steel heat exchanger
Ⓑ Stainless steel MatrixPlus cylinder burner
Ⓒ Burner blower
Ⓓ Gas and hydronic connections
Ⓔ Black and white 3.5 inch boiler control display
Ⓕ Integrated boiler/DHW production pump
Ⓖ DHW plate heat exchanger (combi boilers only)

Mechanical Room

During the early stages of new home design, we recommend that proper consideration be given to constructing a separate mechanical room dedicated to gas- or oil-fired equipment including domestic hot water storage tanks.

The boiler must be located in a heated indoor space, near a floor drain, and as close as possible to the wall.

Whenever possible, install boiler near an outside wall so that it is easy to duct the venting system to the boiler.

Locate boiler on walls capable of supporting the weight of the boiler filled with water (see section entitled “Technical Data" on page 100 for information required for total boiler weight calculation). Ensure that boiler location does not interfere with proper circulation of combustion and ventilation air of other fuel burning equipment (if applicable) within the mechanical room.

The maximum room temperature of the mechanical room where the boiler is located must not exceed 95°F (35°C).

IMPORTANT

Boiler operation in marine environments (damp, salty coastal areas):

The service life of the boiler’s exposed metallic surfaces, such as the casing and fan housing, is directly influenced by proximity to damp and salty marine environments. In such areas, higher concentration levels of chlorides from sea spray, coupled with relative humidity, can lead to degradation of the exposed metallic surfaces mentioned above. Therefore, it is imperative that boilers installed in such environments not be installed using direct vent systems which draw outdoor air for combustion. Such boilers must be installed using room air dependent vent systems; i.e. using room air for combustion. The indoor air will have a much lower relative humidity and, hence, potential corrosion will be minimized.

WARNING

If you notice fire coming from the boiler, call the fire department immediately! Do not attempt to extinguish the fire unless qualified to do so.

WARNING

Fire causes a risk of burns and explosion!
- **Shut down the boiler**
- **Close fuel shut-off valves**
- **Use a tested fire extinguisher, class ABC.**

WARNING

Incorrect ambient conditions can lead to damage to the heating system and put safe operation at risk.

Installation area conditions

- Ensure ambient temperatures are higher than 32°F (0°C) and lower than 95°F (35°C).
- Prevent the air from becoming contaminated by halogenated hydrocarbons (e.g. as contained in paint solvents or cleaning fluids) and excessive dust (e.g. through grinding or polishing work).
  Combustion air for the heating process, and ventilation of the boiler room must be free of corrosive contaminants. To that end, any boiler must be installed in an area that has no chemical exposure. The list below indicates the main, currently known sources.
- Avoid continuously high levels of humidity (e.g. through frequent drying of laundry).
- Never close existing ventilation openings.

Sources of combustion and ventilation air contaminants. Areas likely to contain contaminants:

- New building construction
- Swimming pools
- Remodelling areas, hobby rooms
- Garages with workshops
- Furniture refinishing areas
- Dry cleaning/laundry areas and establishments
- Auto body shops
- Refrigeration repair shops
- Metal fabrication plants
- Plastic manufacturing plants
- Photo processing plants
- Beauty salons

Products containing contaminants:

- Chlorine-type bleaches, detergents and cleaning solvents found in household laundry rooms
- Paint and varnish removers
- Hydrochloric acid, muriatic acid
- Chlorine-based swimming pool chemicals
- Spray cans containing chlorofluorocarbons
- Chlorinated waxes and cleaners
- Cements and glues
- Refrigerant leaks
- Calcium chloride used for thawing
- Sodium chloride used for water softening salt
- Permanent wave solutions
- Adhesives used to fasten building products and other similar items
- Antistatic fabric softeners used in clothes dryers

Before set-up

Before placing boiler in its installation location, ensure all necessary accessories are installed.

CAUTION

The boiler must be installed in such a way that gas ignition system components are protected from water (spraying, splashing, etc.) during boiler operation and service.

Product Information

Rating plate

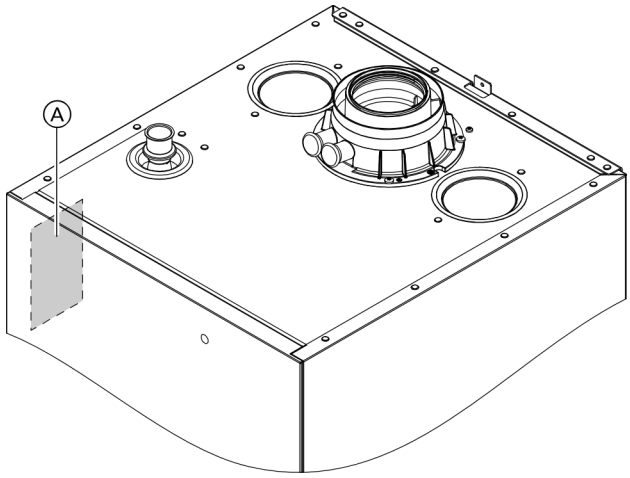

Ⓐ Rating plate with access code for boiler registration

Vitodens 100-W, type B1HE, B1KE
Wall mounted gas condensing boiler with Inox-Radial heat exchanger and the following integrated components:

- Modulating MatrixPlus burner for natural gas and LPG
- Hydraulics with 3-way diverter valve and high efficiency circulation pump
- Type B1KE: Plate heat exchanger for DHW heating
- Weather-compensated or constant temperature control unit

The Vitodens 100-W B1HE is available as a gas condensing boiler for the connection of one DHW tank or as a gas condensing combi boiler B1KE with an integral plate heat exchanger for DHW heating. For the connection of heating circuits and the DHW tank or the DCW/DHW piping for the B1KE, see installation examples starting on page 33.
In the factory set condition, the Vitodens 100-W is set up for operation with constant boiler water temperature. By connecting an outdoor temperature sensor (included with installation accessories), the boiler can be operated in weather-compensated mode.
The following are integrated: closed loop hydraulic system with 2 connections for heating system supply and return, and 2 connections for DHW tank heating (B1HE) or on demand DHW heating (B1KE).
These boilers are only intended for installation in close loop heating systems.

The rating plate of the boiler contains extensive product information and an boiler-specific Access code with the marking “i” for direct access to product-specific information and product registration on the internet.
The access code contains the credentials for the registration and product information portal, as well as the 16-digit serial number.

Note: A further label with the access code is enclosed with the boiler.
Affix the label in the installation and service instructions so it can be easily found again for later use.

System Examples

System examples with hydraulic and electrical connection schemes and function descriptions are available to help setting up the heating system, refer to the system layouts starting on page 33.

Fittings and Sealing Points

All connections on the boiler must be fitted with new gaskets after opening or loosening.

WARNING

Risk of electric shock from escaping heating water or DHW.
When commissioning and after carrying out maintenance work, check all water side connections for leaks.

Minimum Clearances

Recommended minimum boiler service clearances

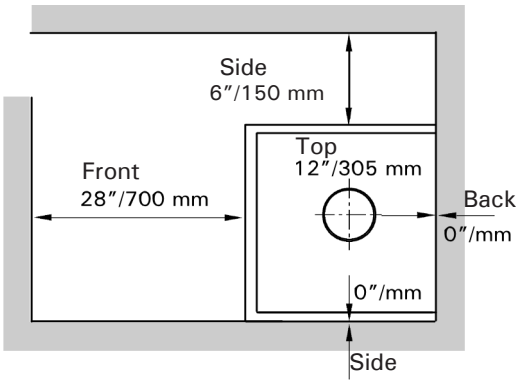

Recommended minimum boiler clearances to combustibles

Note: The Vitodens 100-W boiler has passed the zero inches vent clearance to combustibles testing requirements dictated by the boiler Harmonized Standard ANSI Z21.13. CSA 4.9 (latest edition) and therefore is listed for zero clearance to combustibles when vented with a single-wall special venting system (AL-29-4C material) or UL/ULC-listed CPVC gas vent material.
The zero inches vent clearance to combustibles for the Vitodens 100-W boiler supercedes the clearance to combustibles listing that appears on the special venting system label.

Top clearance - 12 in. (30 cm).

See the Vitodens Venting System Installation Instructions.

Clearance to combustibles

Top	Front	Rear	Left	Right	Vent pipe *1
0	0 AL, CL	0	0	0	0

*1 Refer to the Installation Instructions of the Vitodens Venting System for details.

AL = Alcove
CL = Closet

Boiler Dimensions

B1HE/B1KE 85 and 120

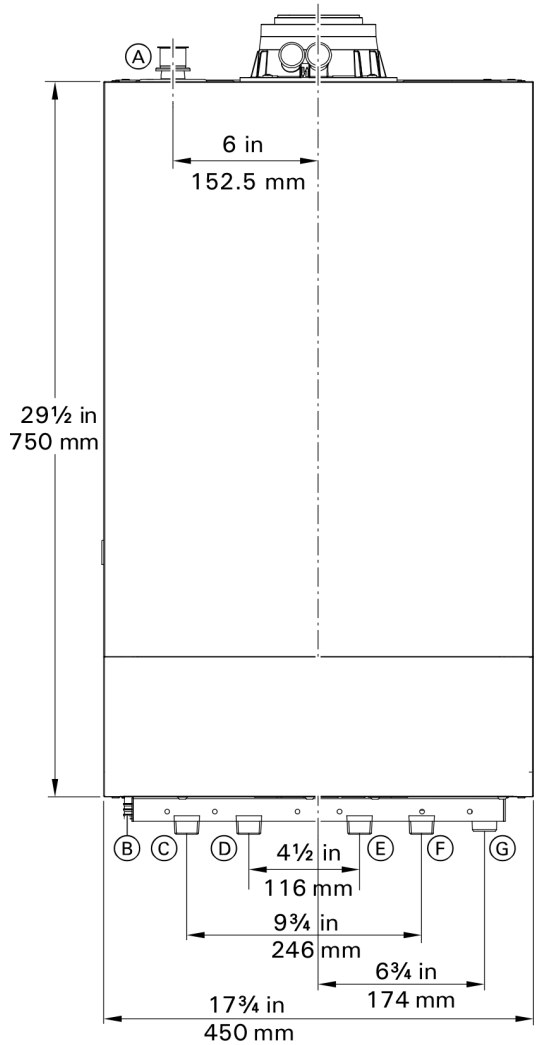

Front view

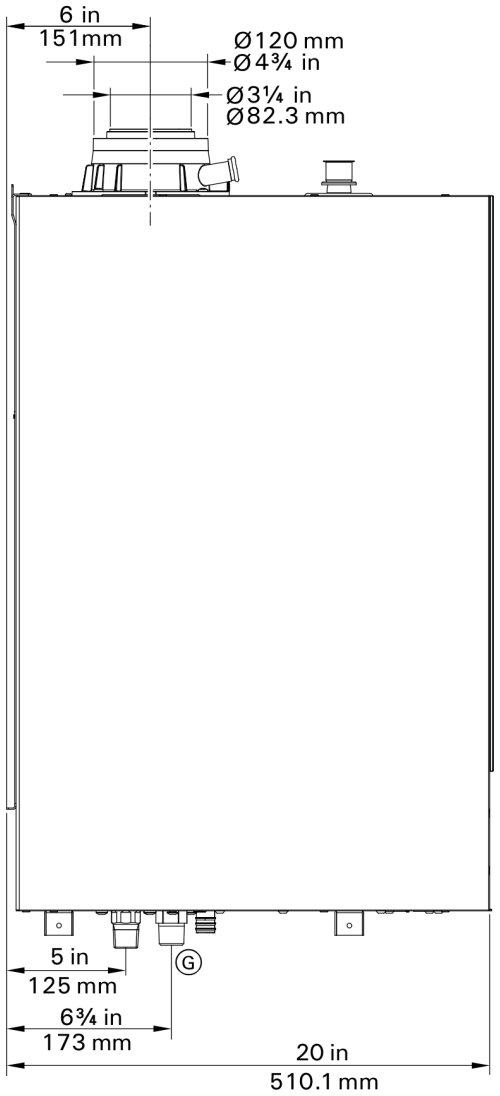

Side view

Legend

Ⓐ Safety valve, pressure gauge connection
Ⓑ Condensate drain
Ⓒ Heating system supply
Ⓓ For B1HE series, DHW tank heating supply
For B1KE series, DHW
Ⓔ For B1HE series, DHW tank heating return
For B1KE series, DCW
Ⓕ Heating system return
Ⓖ Fuel gas connection

Boiler Dimensions *(continued)*

B1HE/B1KE 150 and 199

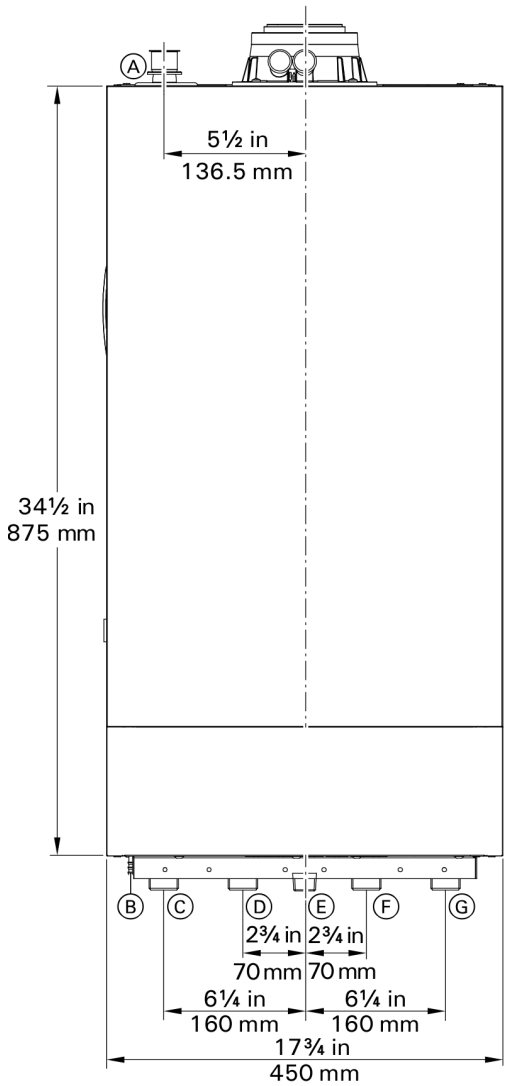

Front view

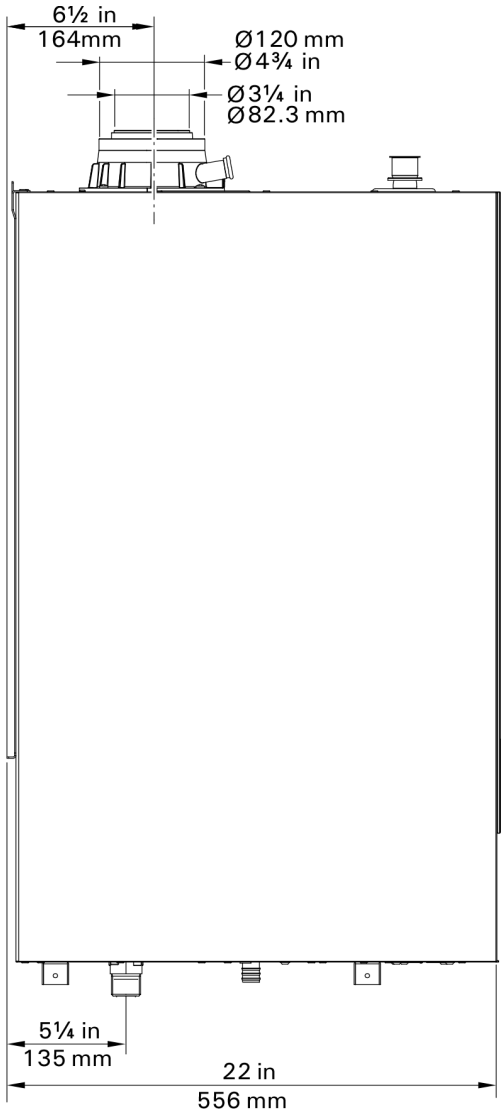

Side view

Legend

Ⓐ Safety valve, pressure gauge connection
Ⓑ Condensate drain
Ⓒ Heating system supply
Ⓓ For B1HE series, DHW tank heating supply
For B1KE series, DHW
Ⓔ Fuel gas connection
Ⓕ For B1HE series, DHW tank heating return
For B1KE series, DCW
Ⓖ Heating system return

Mounting the Boiler and Making Connections

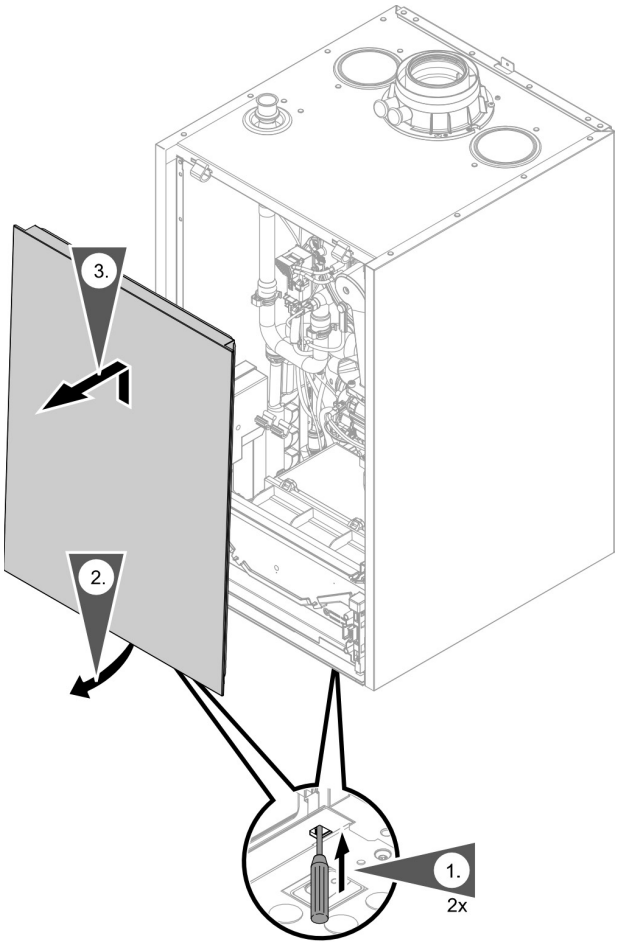

Removing the front panel

1. Unlock the front panel on the underside (push in), using a screwdriver or similar tool.
2. Swivel the front panel forwards slightly and lift away upwards.
   Note: Do not remove protective caps from connections on the heating water side and from the gas connection until you are about to commence installation.

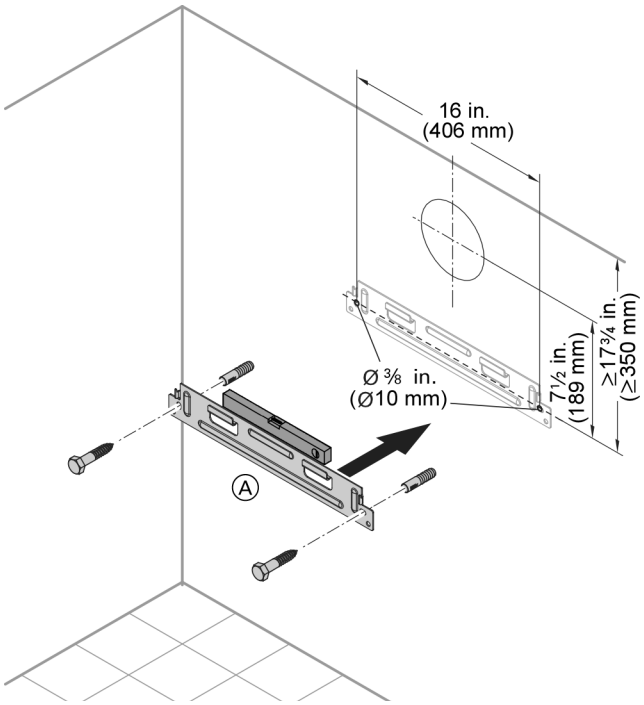

Fitting the wall mounting bracket

Following are the installation instructions for the mounting bracket on each material. See the instructions applicable to your installation requirements.

Installing the wall mounting bracket

The Vitodens 100-W can be wall-mounted on a concrete wall.

Note: The enclosed screws and rawl plugs are only suitable for concrete. For other construction materials, use bolts and anchors that are suitable for 196 lb. (86 kg) loads.

Installation of mounting bracket on brick/concrete wall

1. Mark out the rawl plug holes.
2. Drill holes ∅ ⅜ in. (∅ 10 mm) and insert the rawl plugs supplied.
3. Fit the wall mounting bracket with the screws supplied.

Note: Check the condition of the wall where the boiler is to be installed. For the suitability of the supplied rawl plugs for various building materials, see the manufacturer's instructions.
For other construction materials, use fixing materials with sufficient load bearing capacity.

CAUTION

Whichever mounting method is used, ensure that the bracket is tightly and securely fastened to wall. Failure to secure boiler properly could cause boiler to loosen, posing a severe safety hazard.

Mounting the Boiler and Making Connections *(continued)*

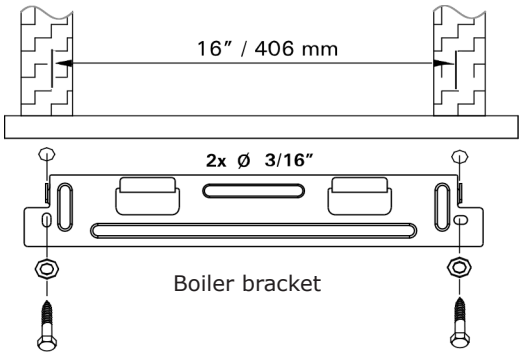

Boiler mounting bracket installation on wood studs

Install mounting bracket on wood studs as per illustration. Drill 3/16 in. pilot holes to insert mounting bolts. Ensure that holes are located in the center of each wood stud. Secure with bolts to wooden studs as shown.

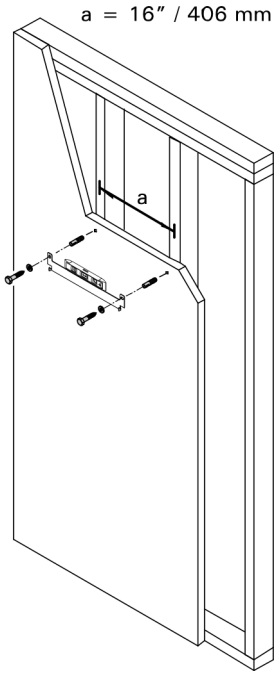

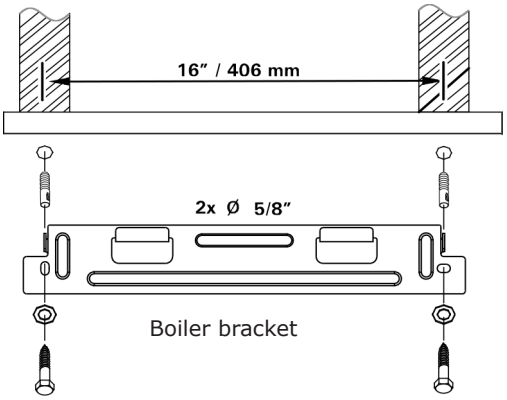

Boiler mounting bracket installation on metal studs

Install mounting bracket on metal studs as per illustration. Drill ⅝ in. pilot holes to insert anchors. Ensure that holes are located in the center of each metal stud.
Use fasteners to mount boiler mounting bracket to metal studs (supplied). Secure with bolts to metal studs as shown. Ensure the mounting bracket is level.

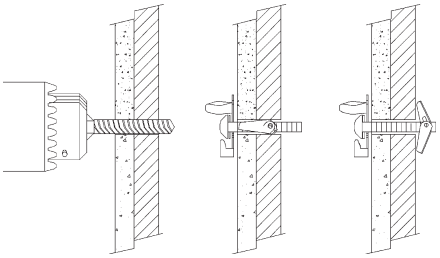

Mounting the Boiler and Making Connections *(continued)*

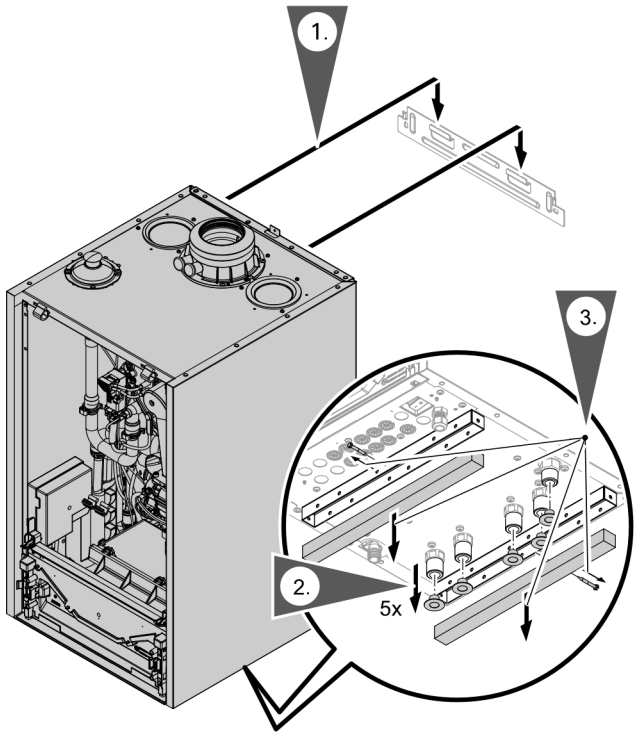

Note: Various installation components can be found installation fittings kit. Keep the installation components safe, as they will be required for later installation.

Note: To prevent dirt from entering the connections: Do not remove the protective caps until you are about to fit the boiler.

1. Mount the boiler on the wall mounting bracket. Ensure that all four mounting tabs of the wall mountng bracket have locked into the boiler.
2. Remove plastic shipping caps from the boiler connections.
3. Remove the wooden blocks from the bottom rails of the boiler.

Mounting the Boiler and Making Connections *(continued)*

Fitting the programming unit mounting bracket on the top of the boiler

In the delivered condition, the programming unit is located on the underside of the boiler. If required for ease of operation, the programming unit can be located on the top of the boiler. To do so, reposition the bracket at the top.

1. Remove the hinges and store them in case they need to be reinstalled at a later date.
2. Pull in the tabs to release the control housing.
3. Pull forward on the control housing to remove it from the jacketing.
4. Disconnect the plug of the connecting cable from the bracket.
   Note: Incorrect routing of the cable can lead to heat damage and impairment of the EMC properties. Do not change the position of the cable or its fixture (fixing point on casing).
5. Rotate the control housing 180 degrees.
6. Insert the plug on the right-hand side again.
7. Re-install the control housing into the up jacket.
8. Install the clips provide into the openings in the bottom of the front cover.

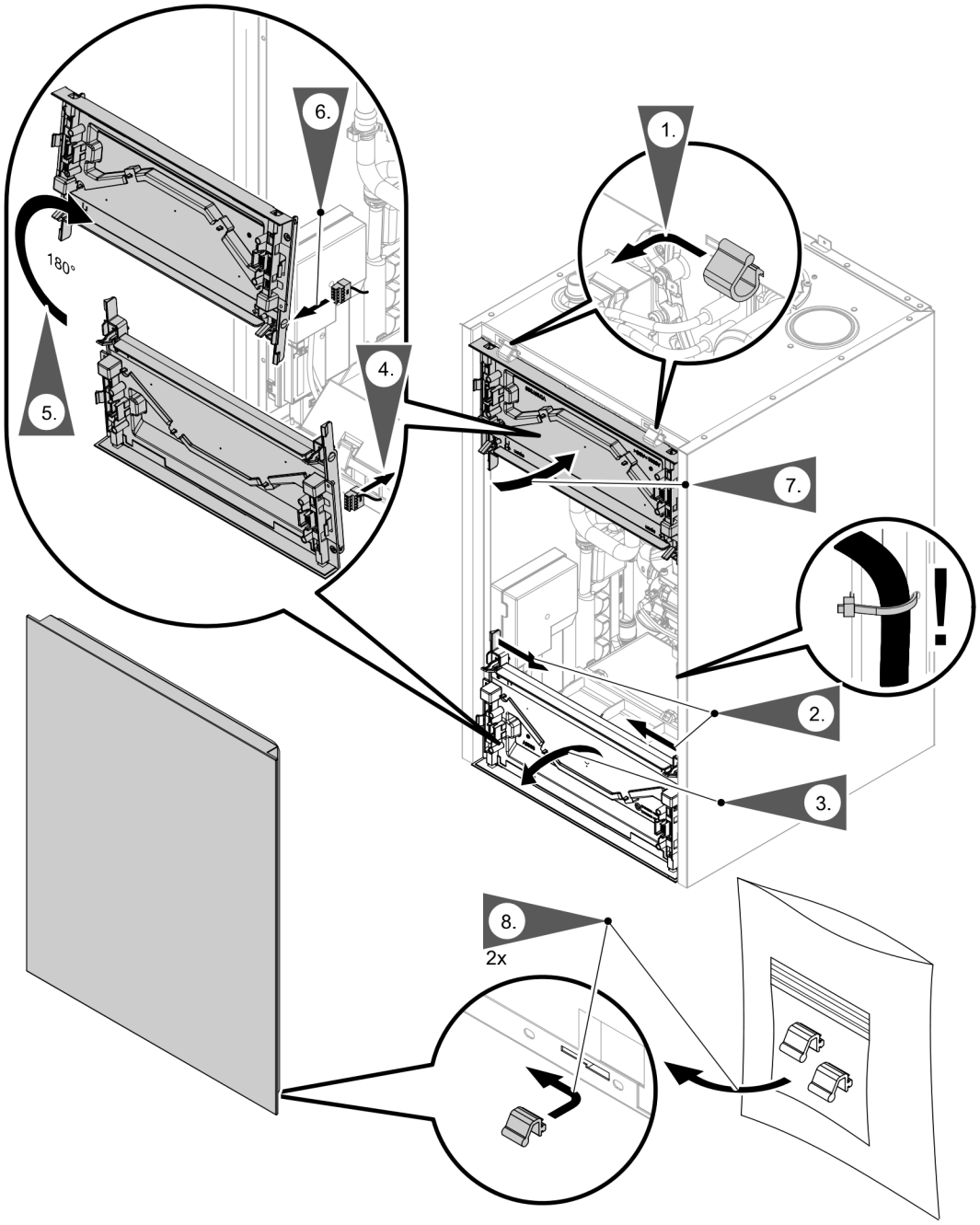

Mounting the Boiler and Making Connections *(continued)*

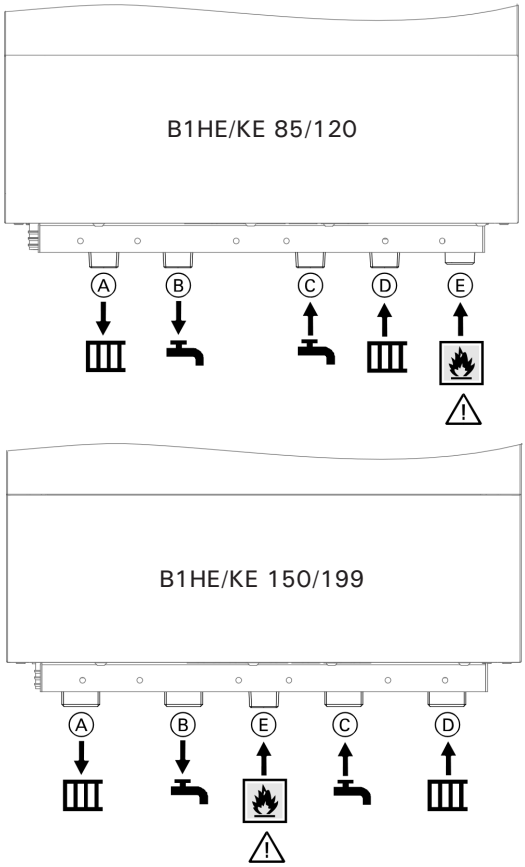

Connections on the heating water and DHW sides

If the connections have not been fitted previously, make the connections on the heating water and DHW sides.

Note: If no tank is connected, close off the tank supply and return with caps (B1HE only).

Note: If the boiler is used for directly connected DHW only a bypass must be installed from boiler supply to boiler the boiler return.

IMPORTANT

Do not use check valves in the DHW system piping (connections Ⓑ Ⓒ in the image provided on the left) on either the B1HE and B1KE boilers.

Legend

Ⓐ Heating system supply
B1HE/B1KE 85, 120 ¾ in. NPT
B1HE/B1KE 150, 199 1 in. NPT

Ⓑ Tank heating supply (B1HE)/DHW (B1KE)
B1HE/B1KE 85, 120 ¾ in. NPT
B1HE/B1KE 150, 199 1 in. NPT

Ⓒ Tank heating return (B1HE)/DCW (B1KE)
B1HE/B1KE 85, 120 ¾ in. NPT
B1HE/B1KE 150, 199 1 in. NPT

Ⓓ Heating system return
B1HE/B1KE 85, 120 ¾ in. NPT
B1HE/B1KE 150, 199 1 in. NPT

Ⓔ Gas connection NPT ¾" (male thread)

⚠ WARNING

Exposing the boiler to pressures and temperatures in excess of those listed will result in damages, and will render warranty null and void.

- Use a two-hand wrench method when tightening fittings or piping onto the boiler connectors. Use one wrench to prevent the boiler pipes from twisting and the second wrench to tighten the fitting or piping. Failure to support the boiler connection could damage the boiler and its internal piping.
- All plumbing must meet or exceed all local state and national plumbing codes.

Piping Connections

2 imperfect threads

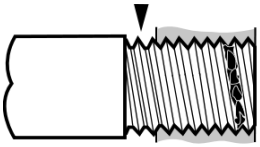

Use moderate amount of dope

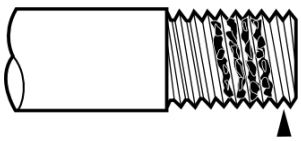

Leave 2 threads bare

Proper piping practice

Support piping by proper suspension method.
Piping must not rest on or be supported by boiler.

See following page for details on gas connection and piping.

⚠ WARNING

Do not damage the gas pipe!
The gas pipe must not come into contact with any other components in the appliance.
Keep the gas pipe from twisting during tightening by using the two wrench system. Do not use pliers!

Piping Connections *(continued)*

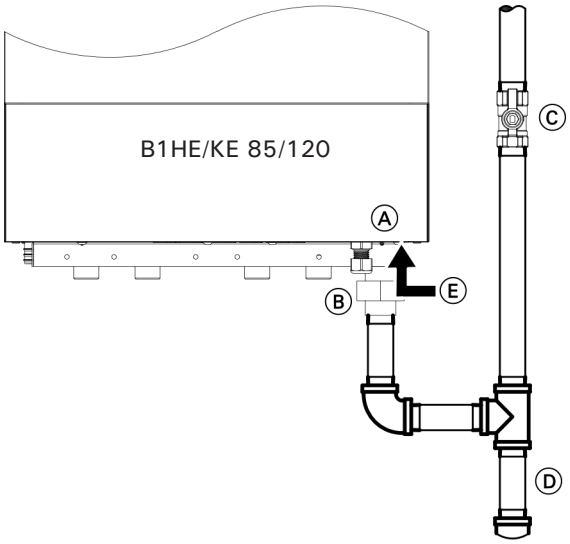

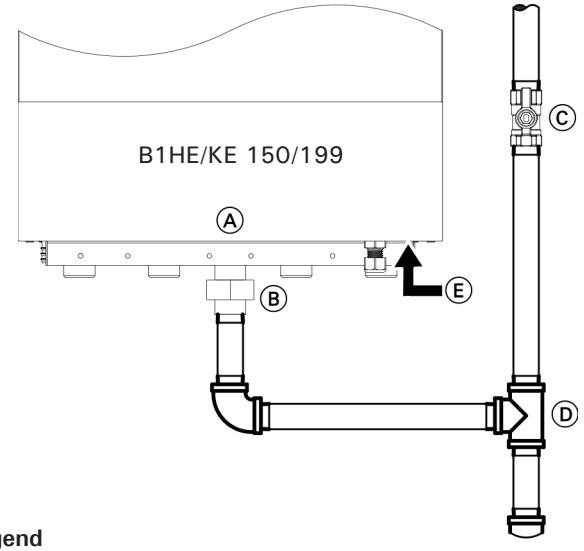

Legend

Ⓐ Gas connection to boiler
Ⓑ Union
Ⓒ Accessible manual gas shutoff
Ⓓ Drip leg
Ⓔ Boiler gas control switch

IMPORTANT

Max. gas supply pressure: 14 "w.c.
½ psig = 14 "w.c.

⚠ WARNING

Never check for gas leaks with an open flame.

⚠ WARNING

Exposing boiler gas pressure regulator and gas valve to extreme pressures renders warranty null and void.

Gas connection and piping *(continued)*

1. Make gas connections in accordance with codes CAN/CSA B149.1 or 2 in Canada.
   In the United States, use the National Fuel Gas Code ANSI Z223.1/NFPA 54, as well as local codes for gas piping requirements and sizing. Pipe size to the boiler must be determined based on:
   - pipe length
   - number of fittings
   - maximum input requirements of all gas boilers in the residence.

IMPORTANT

Design piping layout in such a way that piping does not interfere with serviceable components.

2. Before connecting boiler to gas line, install ground joint union, capped drip leg and a manual equipment shutoff valve. Valves must be listed by a nationally recognized testing agency. Make boiler gas connection as shown on the left.

   Gas connection (NPT).....∅ ¾ in.
3. Perform gas piping pressure test as described in the following subsection.
4. Identify shutoff valves as such with a tab and familiarize operator / ultimate owner of boiler with these valves.

⚠ WARNING

The gas supply piping must be leak tested before placing the boiler in operation.

⚠ CAUTION

Ensure that gas piping is large enough for all boilers in the residence. No noticeable gas pressure drop in the gas line must occur when any unit (or combination of units) lights or runs.

Gas piping pressure test

When performing the gas piping pressure test, ensure the following requirements are met.

1. Isolate the boiler from the gas supply piping system using the individual manual shutoff valve during pressure tests equal to or less than ½ psig (14 "w.c.)
2. The boiler and its individual shutoff valve must be disconnected from the gas supply piping system during any pressure testing of that system at test pressures in excess of ½ psig (14 "w.c.)
3. Perform leak test. Use approved liquid spray solution for bubble test. Ensure that no liquid is sprayed on any electrical components, wires or connectors. Do not allow leak detection fluid to contact gas valve regulator or regulator vent opening.
4. Correct any and all deficiencies.
5. Remove air from gas line.

Piping Connections *(continued)*

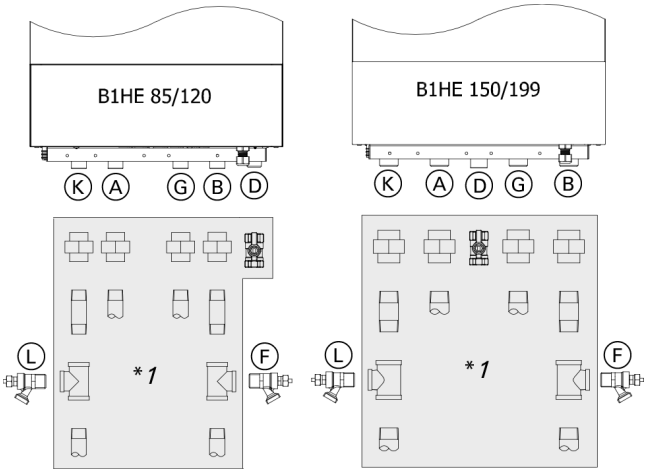

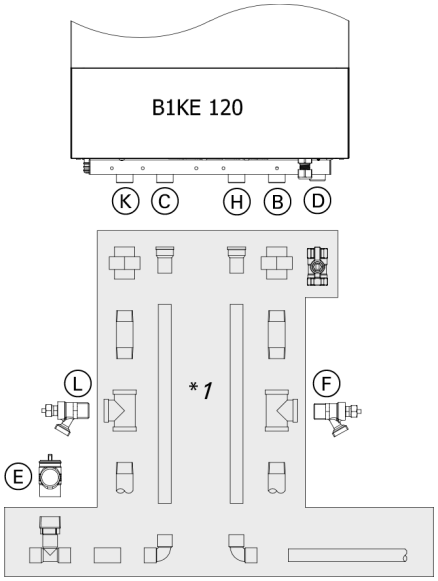

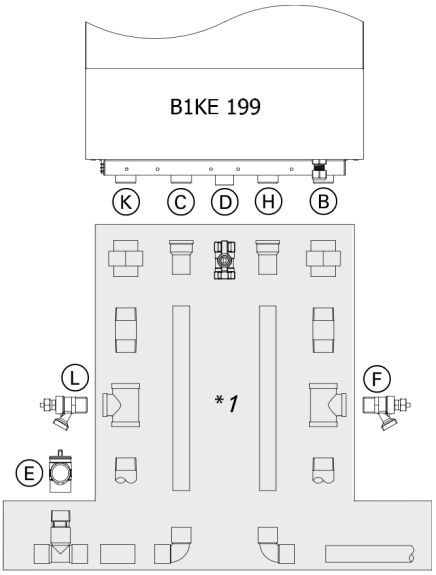

Heating water connections

1. Thoroughly flush heating system (particularly before connecting the boiler to an existing system).
2. Connect boiler to the heating system.
   Note: Use an approved pipe sealant or teflon tape when connecting the installation fittings.

Max. allowable working pressure (MAWP):
B1HE/KE 85/120 .....45 psig (3 bar)
B1HE/KE 150/199 .....60 psig (4 bar)

WARNING

Exposing the boiler to pressures and temperatures in excess of those listed will result in damages, and will render warranty null and void.

- Use a two-hand wrench method when tightening fittings or piping onto the boiler connectors. Use one wrench to prevent the boiler pipes from twisting and the second wrench to tighten the fitting or piping. Failure to support the boiler connection could damage the boiler and its internal piping.
- All plumbing must meet or exceed all local state and national plumbing codes.

IMPORTANT

SUPPORT ALL PIPING USING HANGERS. DO NOT support piping by the boiler or its components.

- Use isolation valves to isolate system components.
- The B1HE DHW tank heating supply and return ports must be capped if the DHW tank is not used.

General

A distance of 2 in. (50 mm) from uninsulated hot water pipes to combustible components must be maintained. If the pipes are provided with a suitable pipe insulation of sufficient thickness and insulation, the distance mentioned above is not necessary (see also local gas regulations).

Scald protection

DHW temperatures of over 140°F (60°C) can occur with gas condensing combi boilers. As a result, scald protection should be installed on site in the DHW pipe.

Legend

Ⓐ Tank heating supply
Ⓑ Heating system return
Ⓒ DHW (B1KE only)
Ⓓ Gas connection
Ⓔ 150 psi DHW pressure relief valve (B1KE only)
Ⓕ Filling valve
Ⓖ Tank heating return
Ⓗ Connection cold water (B1KE only)
Ⓚ Heating system supply
Ⓛ Drain valve

*1 Field supplied components

Condensate Connection

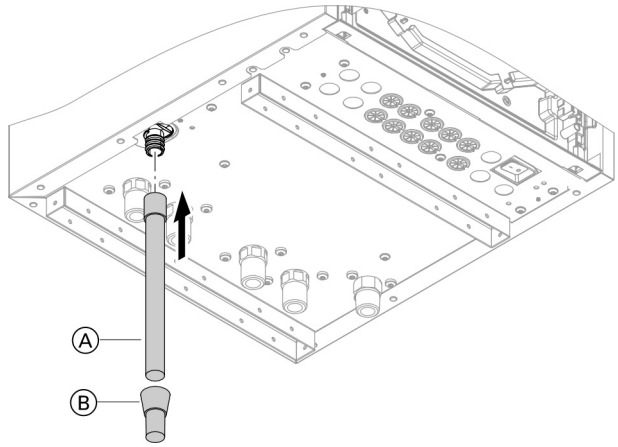

Legend

Ⓐ Flexible discharge tubing

Ⓑ Discharge tubing

Condensate installation example:

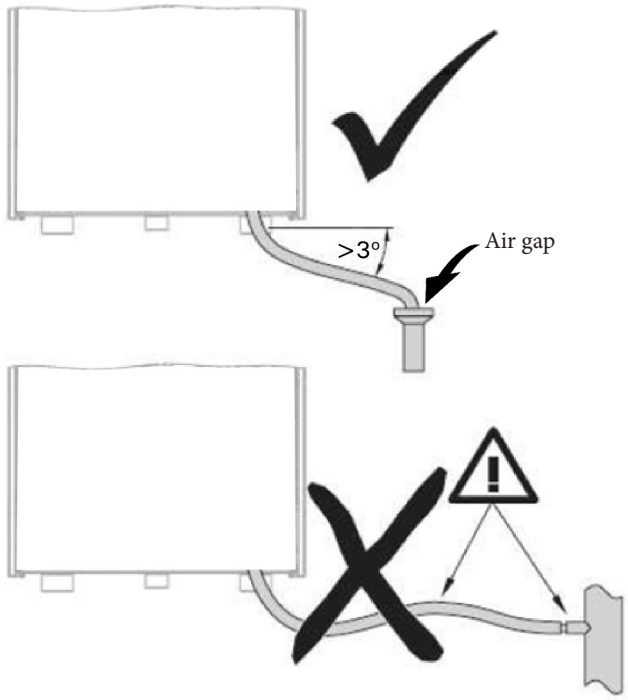

Condensate connection

The Vitodens 100-W B1HE/KE boiler comes with a built-in condensate trap. An external trap is not required when connecting the field drain to flexible discharge tubing. Discharge tubing (field supplied) must be of 1 in. diameter. Use CPVC, PVC or other material approved by codes listed below.

The drain pipe and fittings must conform to ANSI standards and ASTM D1785 or D2846. CPVC or PVC cement and primer must conform to ASTM D2564 or F493. In Canada use CSA or ULC listed schedule 40 CPVC or PVC drain pipe, fittings and cement.

If the condensate outlet of the Vitodens 100-W boiler is lower than the drain, a condensate pump must be installed. Select a pump which is approved for condensing boiler applications. To avoid condensate spillage, select a pump with an overflow switch. The drain connection must terminate into an open or vented drain as close to the boiler as possible to prevent siphoning of the boiler drain.

1. Install the condensate drain pipe onto the boiler with a suitable gradient. Ensure that there is no unnecessary bends are created inside the boiler. Check tightness of siphon connection.

IMPORTANT

As shipped, the flexible discharge tubing A **will be found with the installation fittings. Ensure the condensate drain pipe is installed and positioned to allow the condensate to properly drain.**

2. Discharge condensate from the boiler into the vented drainage system, either directly or (if required) via a neutralization unit (accessory).

Installation Instructions of Neutralization Unit (if applicable)

IMPORTANT

Pipe ventilation must take place between the siphon trap and the neutralization unit (if applicable).

IMPORTANT

Do not connect the drain pipe from any other boiler, such as water softener backwash pipe, to Vitodens condensate drain pipe.

3. Ensure the condensate discharge tubing is vented to the atmosphere prior to being plumbed into the neutralization unit.

Condensate Connection *(continued)*

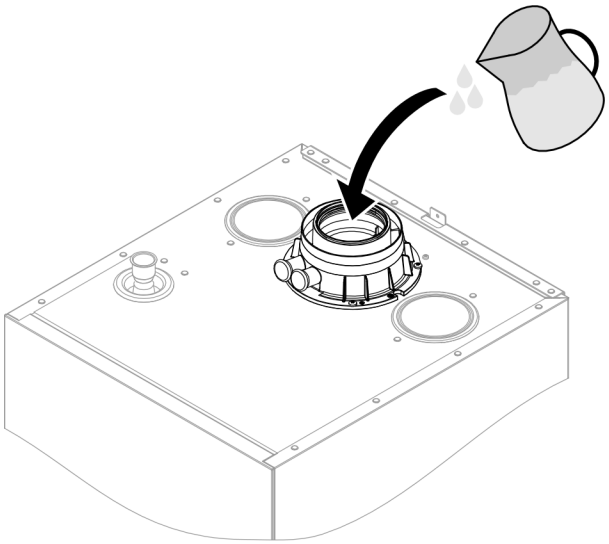

Filling the trap with water

Pour at least 10 oz (0.3 L) of water into the flue gas connection.

IMPORTANT

During commissioning, flue gas may escape from the condensate drain.
Always fill the trap with water before commissioning.

Note: If there is a risk of frost, only fill the trap just before commissioning.

Neutralization Unit

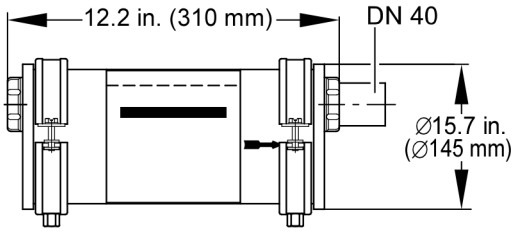

for models B1HE/KE 85, 120

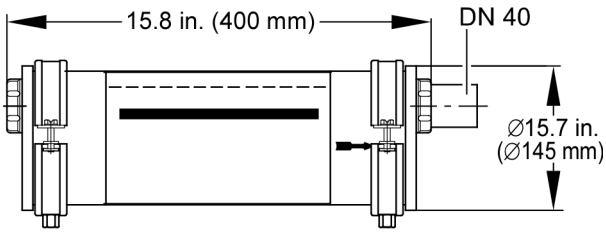

for models B1HE/KE 150, 199

Neutralization Unit
with neutralizing granulate

Neutralization Pellets
2 x 1.3 kg for refill or replacement purposes

DHW Tank Connections

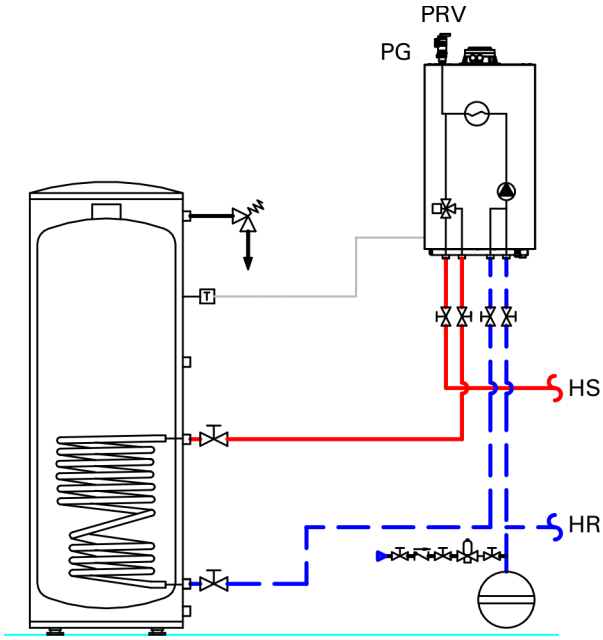

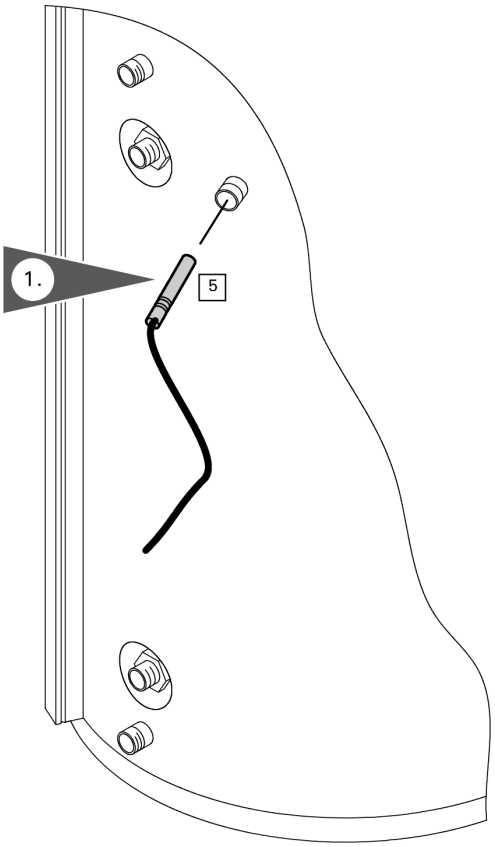

Vitodens 100-W B1HE boilers can be used in conjunction with the stand-alone DHW storage tanks offered by Viessmann.
For the connection of a stand-alone DHW tank, installation fittings (field supplied), and a DHW temperature sensor (supplied with boiler) or DHW temperature switch (field supplied) are required.

Size and select the DHW storage tank based on the forecasted DHW consumption of the building in question. For further technical information on DHW storage tanks, see the Vitocell Technical Data Manuals.

Note: the Vitodens 100-W B1HE can be used with a field supplied DHW temperature switch (i.e. Aquastat).

HS Heating system supply
HR Heating system return

DHW storage tank information

The DHW water tank sensor is required when using a stand-alone DHW storage tank with the Vitodens 100-W B1HE heating boiler. It comprises the sensor only required for the connection of a stand-alone tank.
All other required piping connections are field supplied.

IMPORTANT

Apply sufficient amount of thread sealant (supplied) when making the connections.

Making the DHW connections

1. With a Vitocell 300 series tanks locate the DHW temperature sensor well and install the DHW temperature sensor [5] using the installation instructions provided with the DHW storage tanks.

IMPORTANT

Follow the Installation Instructions supplied with the Viessmann DHW storage tank when mounting and securing DHW tank temperature sensor [5].

⚠ WARNING

If a DHW storage tank other than a Viessmann Vitocell 300 tank is used, the installer must verify proper operation of the Viessmann DHW tank temperature sensor with original manufacturer of the tank. Viessmann strongly recommends the installation of a temperature tempering valve in the DHW supply line.

Safety Valve

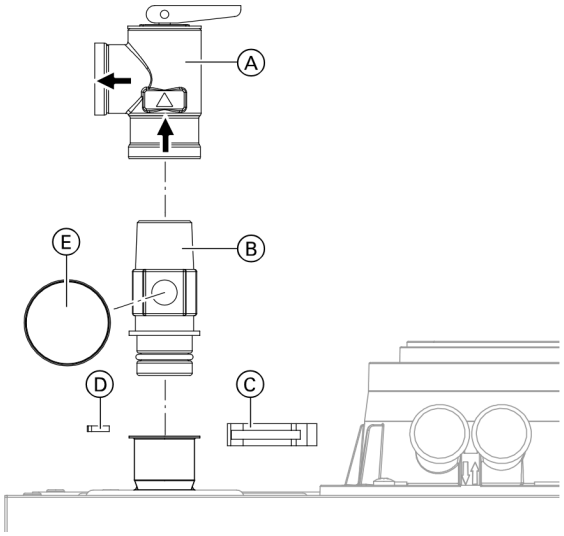

Legend

Ⓐ Safety valve
Ⓑ Brass adapter
Ⓒ Retaining clip
Ⓓ Cable ties
Ⓔ Pressure gauge

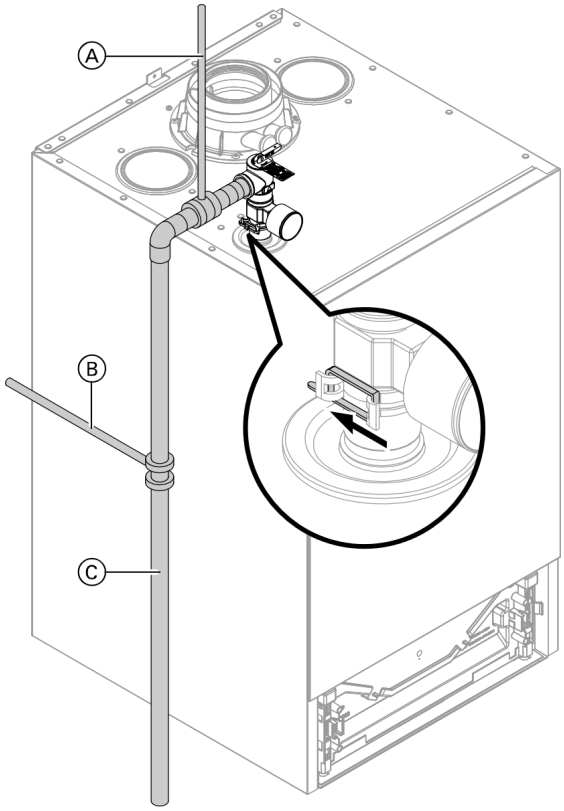

Legend

Ⓐ Ceiling bracket (field supplied)
Ⓑ Wall mounting bracket (field supplied)
Ⓒ Drain pipe (field supplied)

Fit the safety valve:

1. Install safety valve Ⓐ onto brass adapter Ⓑ and tighten.
2. Screw pressure gauge Ⓔ onto brass adapter Ⓑ.
3. Fit brass adapter Ⓑ to the boiler with retaining clip Ⓒ. Secure retaining clip Ⓒ with cable tie Ⓓ.

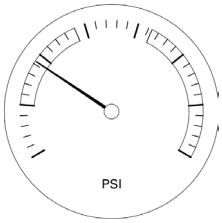

The boiler water pressure reading is displayed on an analog gauge.

⚠ WARNING

The pressure gauge is a sensitive component and may be damaged if the boiler connections are not supported by using a second wrench when tightening fittings and/or piping.

Minimum connection diameters:
Pressure relief valve..... ¾ in.
Discharge pipe ..... ¾ in.

IMPORTANT

Install the (approved) factory supplied pressure relief valve. Removal of air from the system must occur via use of air vent(s) in the system supply. To ensure the boiler can be purged of all air, ensure supply/return water lines do not contain restrictive piping where air could be trapped.

1. Install discharge pipe on pressure relief valve in such a way that...
   - the end of the pipe is not threaded.
   - the pressure relief discharge pipe extends to a floor drain and ends approximately 6 in. (150 mm) above the drain.

   Ensure that...
   - there is no shutoff valve installed in the discharge pipe.
   - discharge pipe diameter is not reduced.
   - discharge is not piped to outdoors.

⚠ WARNING

Do not install an isolation valve between boiler and pressure relief valve.
The discharge pipe for the pressure relief valve must be oriented to prevent scalding of attendants.
Pipe pressure relief valve discharge pipe close to floor drain. Never pipe discharge pipe to the outdoors.

IMPORTANT

The pressure relief valve discharge pipe Ⓒ must be supported using either a ceiling mounted support Ⓐ or a wall mounted support Ⓑ. Piping must be install free of stress.

Flue Gas Connection

WARNING

Leaking or blocked flue systems, or an inadequate supply of combustion air can cause life threatening poisoning from carbon monoxide in the flue gas.
Ensure the flue system is in good working order.
Vents for supplying combustion air must be non closable.
Prevent condensate drainage via a wind protector.

Refer to the Vitodens Venting System installation instructions

Only carry out commissioning when the following conditions have been met:

- Unrestricted flow in the flue gas routes.
- Positive pressure flue system is gas-tight.
- Inspection port covers checked for secure and tight seating.
- Apertures for supplying sufficient combustion air are open and cannot be closed.
- All current regulations on installing and commissioning flue systems have been observed.

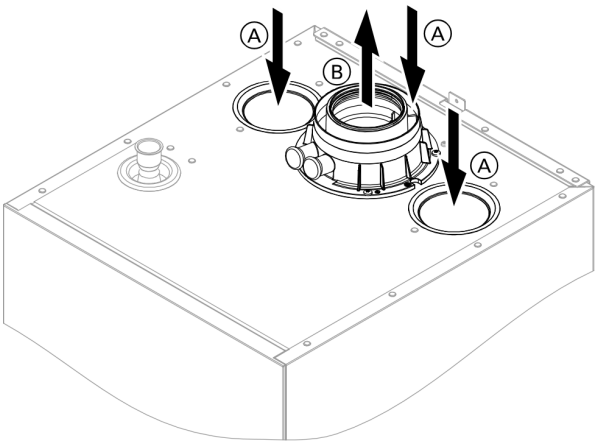

Legend

Ⓐ Combustion air
Ⓑ Flue gas

1. Do not damage the sealing lip on the outside ring of the sealing plug. Carefully detach the inner part of the sealing plug, preferably without using a tool.
2. **Note:** If the boiler is direct vent with a two pipe system, the coaxial vent seal must be fitted!

For direct vent applications the combustion air gaskets position can be interchanged.
One gasket is sized for a 3½ in. (89 mm) ouside diameter (for CPVC/PVC/ABS), combustion air piping the other is sized for a 3⅛ in. (80 mm) (for PPs) outside diameter combustion air piping.

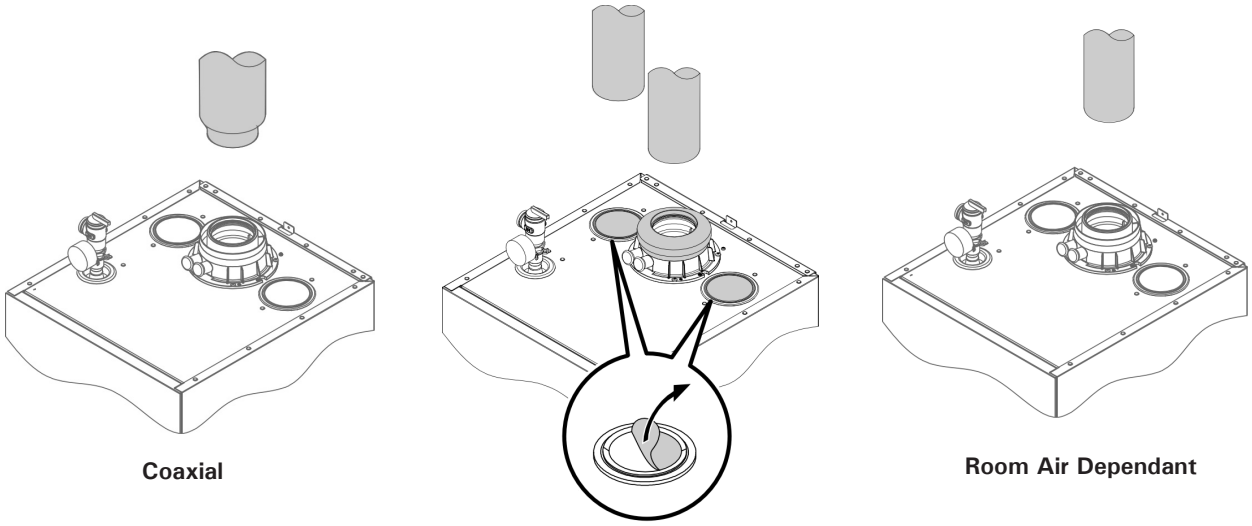

Coaxial

Direct Vent

Room Air Dependant

Electrical Connections

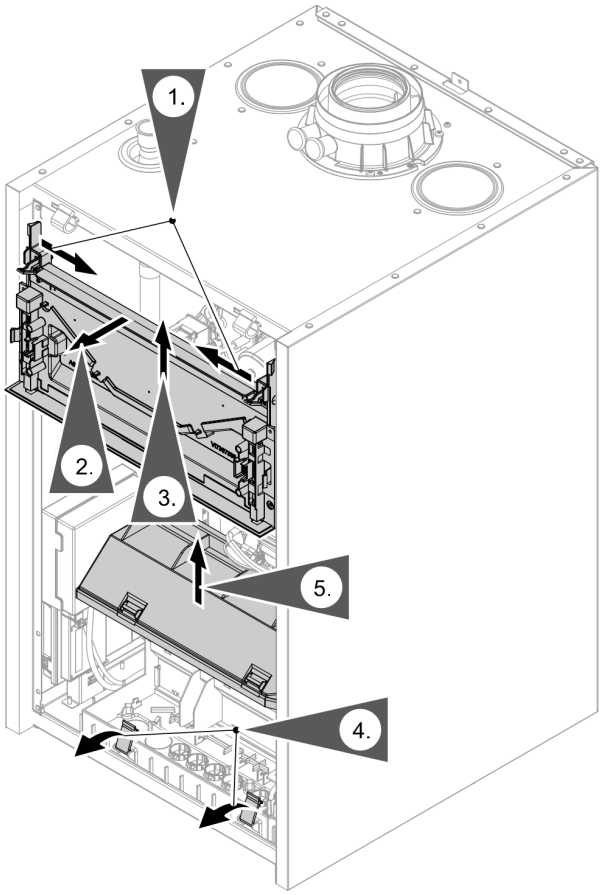

Opening the junction box

IMPORTANT

Electronic assemblies can be damaged by electrostatic discharge.
Before beginning work, touch grounded objects, such as water pipes, to discharge any static.

Placing the control base in the service position

1. Release tabs on the boiler control base.
2. Pull the control base straight out.
3. Place the control base in the service position, there are positioning tabs located at the rear of the control base to be aligned with the holes in the boiler jacket and lock in place with the control base clips.
   Note: Steps 1 to 3 are required only if the programming unit is located at the bottom.
   Do not disconnect the plug from the mounting panel.
   Do not change the position of the cable or its strain relief on the boiler jacketing

Opening the junction box

4. Release junction box cover clamps.
5. Lift the junction box cover.

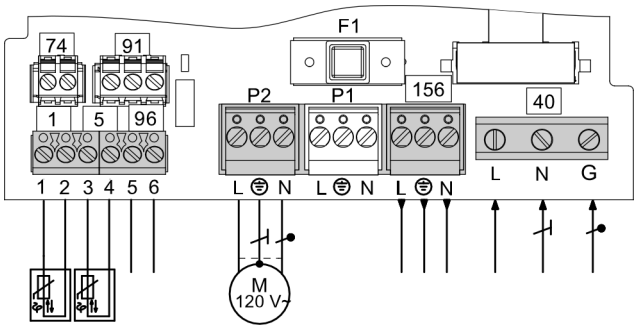

Layout of the electrical connections

Note: For further information on the connections, see the following chapters.

Note on connecting accessories
When connecting accessories observe the separate installation instructions provided with them.

40 Power cable (already connected)
156 Switched power outlet (max. 36 watts)
P1 Output 120V for:
DHW pump
P2 Output 120V for:
Circulation pump for zone control (call for heat pump)
91 CAN bus (no function)
74 PlusBus (no function)
1 Outside temperature sensor, terminals 1 and 2
5 Tank temperature sensor, terminals 3 and 4
96 Call for heat, terminals 5 and 6

Electrical Connections *(continued)*

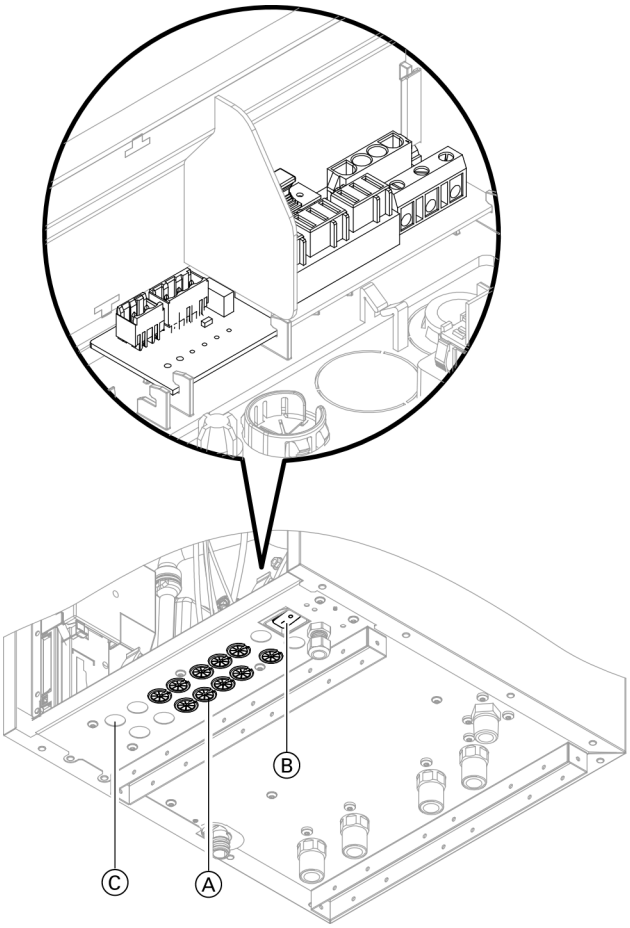

View of boiler up to 120 MBH
Ⓐ Diaphragm grommets, 120V cables
Ⓑ ON/OFF switch
Ⓒ Knockouts for 120VAC connections

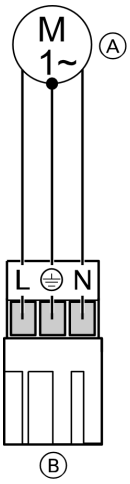

Legend
Ⓐ Circulation pump
Ⓑ Plug P1/P2 on the wiring panel

On-site connections to the HMU heat management unit

- Required plugs are supplied in separate packaging.
- For cables without strain relief bushings, provide strain relief in the junction box in the form of cable ties.

Outside temperature sensor 1

Sensor location:

- North or northwest wall of building
- 80 to 100 in. (2 to 2.5 m) above ground or in case of a multi-storey building approximately halfway up the second floor

Electrical connection:

- 2-wire cable, max. cable length 115 ft. (35 m) with a wire size of min. AWG 16 copper
- Cable to the outdoor sensor must not be laid near line voltage wiring (120VAC or greater)

Connecting the tank temperature sensor (B1HE only)

Connect tank temperature sensor 5 to terminals 3 and 4 on the wiring panel. See page 25.
Note: Alternatively, a "temperature switch" (Aquastat) can be connected.

CAUTION

Under certain climatic conditions some building materials may be affected by flue products expelled in close proximity to unprotected surfaces. Sealing or shielding of the exposed surfaces with a corrosion resistant material (e.g. aluminum sheeting) may be required to prevent staining or deterioration. The protective material should be attached and sealed (if necessary) to the building before attaching the vent termination. It is strongly recommended to install the vent termination on the leeward side of the building.

Connecting the circulation pump to P1 and P2

Note: Observe the priority of the connections.

- Possible connections to P1 and priority of connections: DHW pump or DHW recirculation pump.
- Possible connections to P2 and priority of connections: Circulation pump for zone control

The function of connections P1 and P2 is selected in the commissioning assistant by selecting the connected component in the system scheme.

Specification	
Rated current	2A
Rated voltage	120V ~

Electrical Connections *(continued)*

Floating switching contact connection

Connection to plug 96 – terminals 5 and 6.
The following function can be connected:
Call for heat.
Contact closed – demand for set target value.
The boiler and heating circuit pump are switched on.
Contact open – no demand, no heating operation.

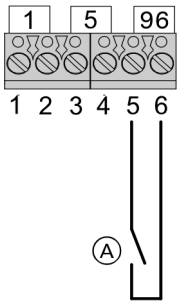

Legend

Ⓐ Dry contact

Assigning functions in the commissioning assistant

See commissioning assistant in “Commissioning”.

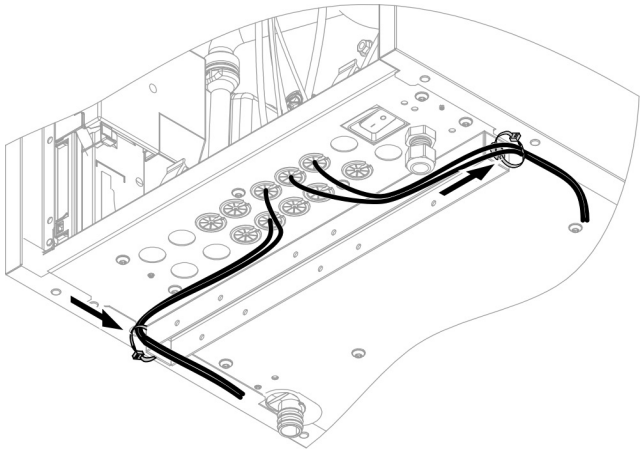

Routing connecting cables/leads

Bundle cables using cable ties.
Route low voltage cables separately from 120V~ cables.
Secure the cables on the underside using the supplied cable ties.
Do not route cables over sharp edges.

IMPORTANT

If connecting cables/leads come into contact with hot components, they will be damaged.
When routing and securing cables/leads on site, ensure that the maximum permissible temperatures for these cables/leads are not exceeded.

Electrical Connections *(continued)*

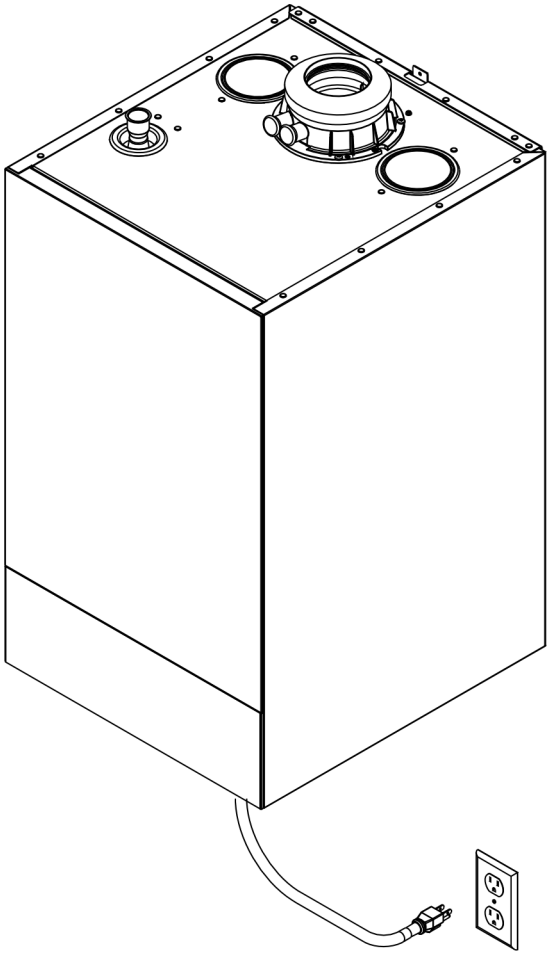

The Vitodens 100-W comes with a pre-installed convience plug for the boiler power supply, if required this convience plug can be removed in the junction box for field wiring of the boiler power supply requirements:
120VAC/60Hz/12A
Refer to the wiring diagram on page 97.

WARNING

Incorrectly executed electrical installations can result in injuries from electrical current and in damage to the boiler.

WARNING

The control must be grounded.
Ensure that 'L', 'N' and 'G' are not interchanged.

IMPORTANT

Electrical installations must comply with the latest edition of:
- In the U.S.A., the National Electrical Code (NEC), ANSI/NFPA 70 and any other state, local codes and/or regulations.
- In Canada, the Canadian Electrical Code (CEC), CSA C22.1 Part 1 and any other province, territory, local codes and/or regulations.

WiFi Operational Reliability and System Requirements

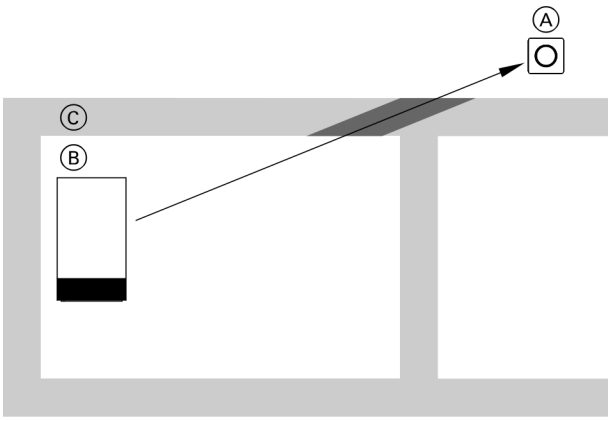

Flat (unfavourable) angle of penetration

Legend
Ⓐ WiFi router
Ⓑ Boiler
Ⓒ Wall

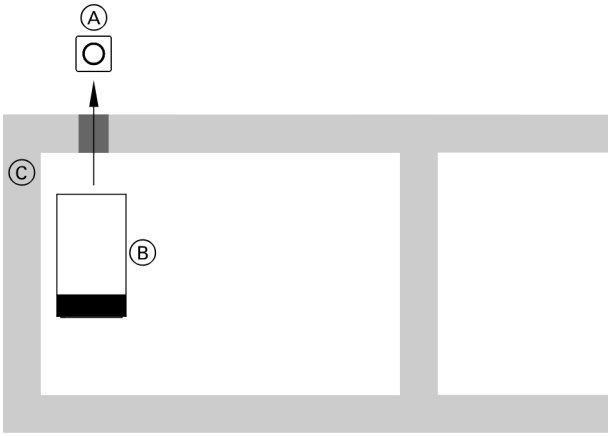

Ideal angle of penetration

Legend
Ⓐ WiFi router
Ⓑ Boiler
Ⓒ Wall

This device complies with part 15 of the FCC Rules. Operation is subject to the following two conditions:
(1) This device may not cause harmful interference, and
(2) this device must accept any interference received, including interference that may cause undesired operation.

CAUTION

Changes or modifications not expressly approved by the party responsible for compliance could void the user's authority to operate the equipment.

WiFi router system requirement

- WiFi router with activated WiFi:
  The WiFi router must be protected by a sufficiently secure WPA2 password.
  The WiFi router must always have the latest firmware update.
  Do not use unencrypted connections between the boiler and the WiFi router.
- Internet connection with high availability:
  Flat rate (flat rate tariff without restriction on time or data volume)
- Dynamic IP addressing (DHCP, factory setting) in the network (WiFi):
  Have this checked on site, and if required set up, by an IT expert prior to commissioning.
- Set routing and security parameters in the IP network (LAN):
  Enable port 80, port 123, port 443 and port 8883 for direct outward connections.
  Have this checked and, if necessary, set up on site by an IT expert before commissioning.

Wireless signal range of WiFi connection

The range of wireless signals may be reduced by walls, ceilings and interior fixtures. These weaken the wireless signal, causing poor reception due to the following circumstances.

- On their way between transmitter and receiver, wireless signals are damped, e.g. by air or when penetrating walls.
- Wireless signals are reflected by metallic objects, e.g. reinforcements embedded in walls, metal foil of thermal insulation and thermal glazing with metallized thermal vapour deposit.
- Wireless signals are isolated by service ducts and lift shafts.
- Wireless signals are disrupted by devices that also operate with high frequency signals. Maintain a distance of at least 6 ft (2 m) from these devices:
  – Computers
  – Audio and video systems
  – Devices with active WiFi connection
  – Electronic transformers
  – Pre-ballasts

Install the boiler as close as possible to the WiFi router to ensure a good WiFi connection. The signal strength can be displayed on the boiler (see the operating instructions).
Note: The WiFi signal strength can be increased with commercially available WiFi repeaters.

Angle of penetration

The reception quality remains best if wireless signals hit the walls vertically.
Depending on the angle of penetration, the effective wall thickness changes and so does the extent to which the electromagnetic waves are damped.

Closing the Junction Box

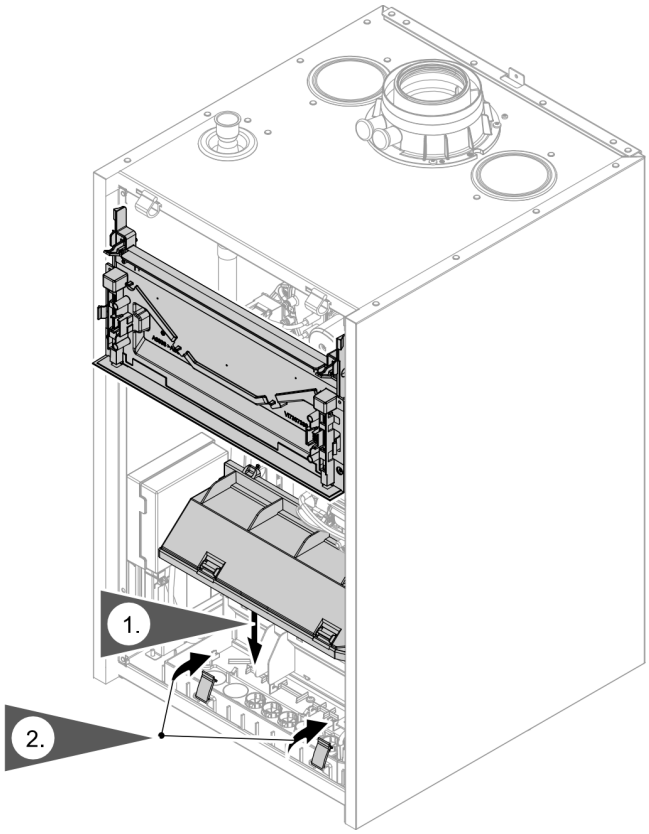

IMPORTANT

Do not operate the control unit without a "junction box lid". The junction box lid in the control unit enclosure separates the mains and extra low voltage potential and seals it off from the air box.
The junction box lid must be fitted when replacing the control unit or closing the control unit enclosure.

1. Place the junction box lid on the junction box.
2. Secure in place with latches.

Fitting the Programming Unit and Front Panel

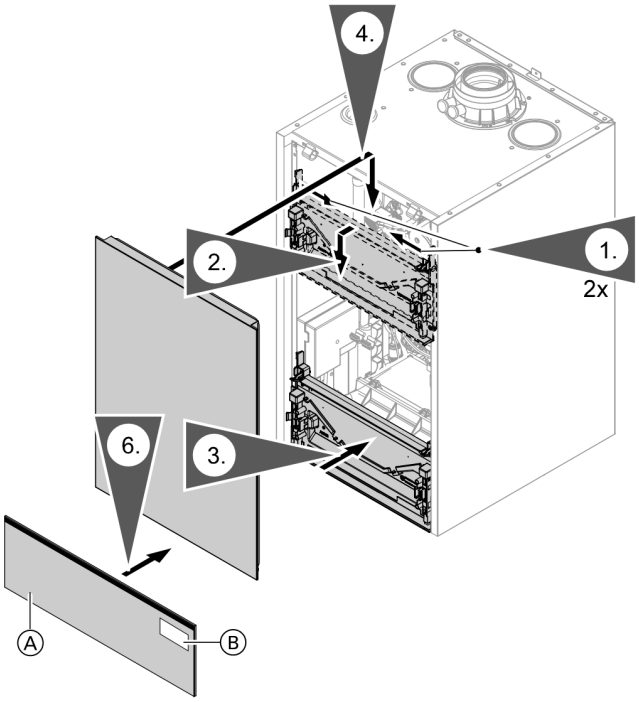

Legend
Ⓐ Lightguide (at the top)
Ⓑ WiFi label

Programming unit located at the bottom

1. Release the tabs on the boiler control base.
2. Pull the control base straight out.
3. Re-install the control base into the base of the boiler.
   Note: steps 1 to 3 are only required if the control base is in the service position.
4. Install the front panel.
5. Install the programming unit in the control base.

Note: Before installing the programming unit remove the WiFi labels from the back of the programming unit and apply one label Ⓑ on the programming unit, one in these instructions and one in the operating instructions.

Fitting the Programming Unit and Front Panel *(continued)*

Programming unit located at the top

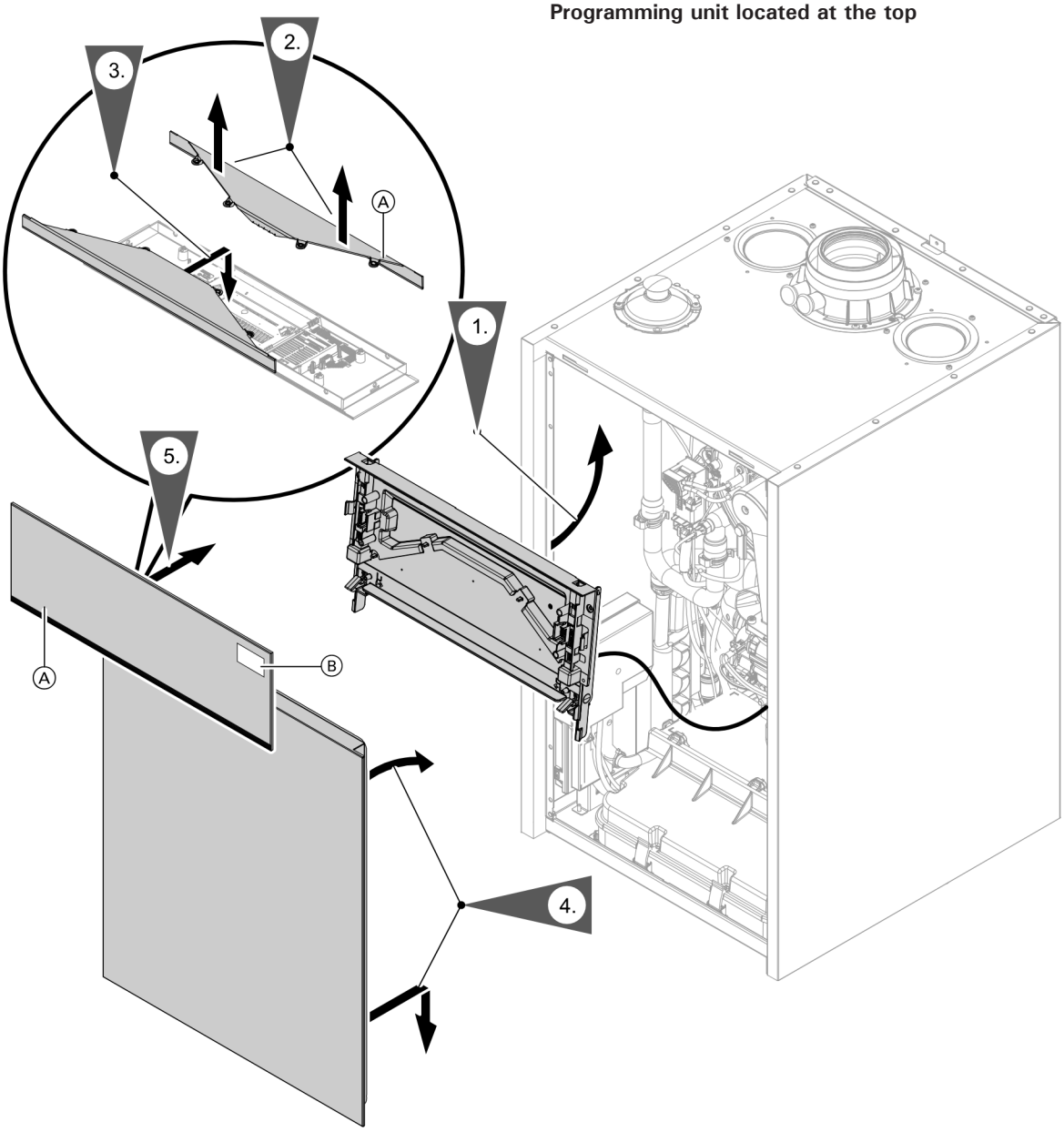

Legend
Ⓐ Lightguide (at the top)
Ⓑ WiFi label

1. Install the mounting panel for the programming unit at the top. See page 16.
   Reconnect the plugs to the mounting panel on the right. Do not alter where and how the cable is secured (fixing point of the cable tie).
2. Pull Lightguide Ⓐ out of all 4 detents at once and remove. As you do so, pull it upwards between 2 detents, in the middle and at the same time.
   Ensure that the locking tabs do not break off.
3. Turn Lightguide Ⓐ around and clip it into place at the bottom of the programming unit.
4. Fit the front panel.

IMPORTANT

The front panel also serves to seal off the air box. Ensure the front panel is seated correctly.

5. Fit the programming unit with Lightguide Ⓐ at the bottom.

Adjusting Pump Rate of Integrated Circulation Pump

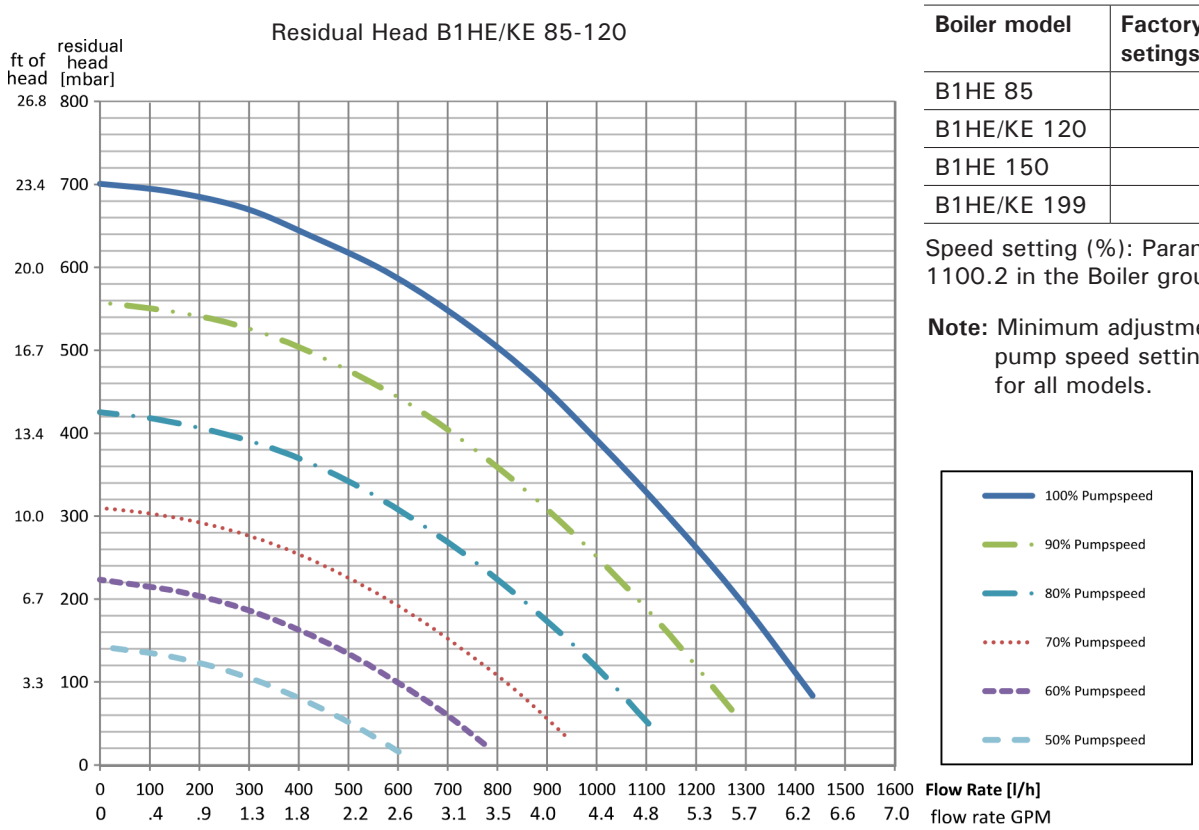

Boiler model	Factory-set speed setings in %
B1HE 85	80
B1HE/KE 120	100
B1HE 150	70
B1HE/KE 199	85

Speed setting (%): Parameter 1100.2 in the Boiler group

Note: Minimum adjustment of boiler pump speed setting is 50% for all models.

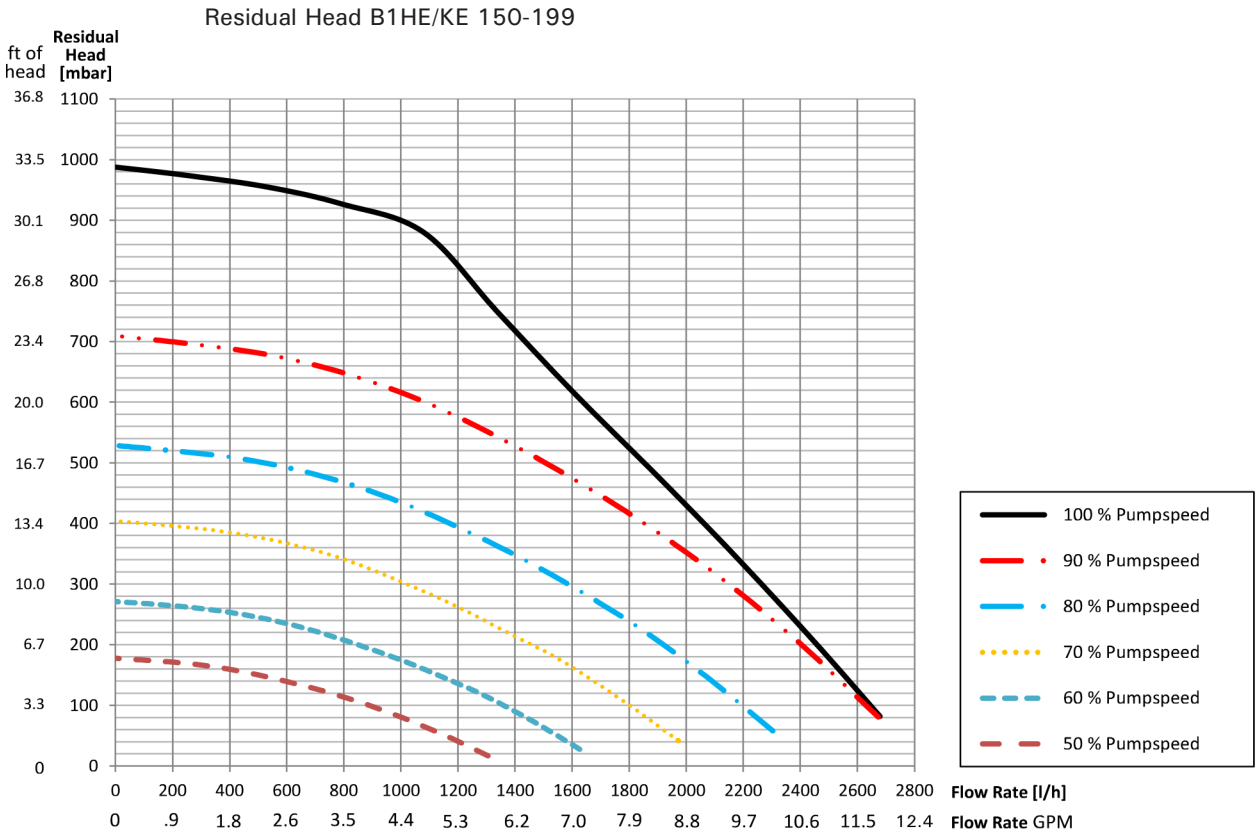

System Layout 1

Vitodens 100-W, B1HE 85, 120, 150, 199 with
- DHW storage tank
- one heating circuit connected directly to the boiler

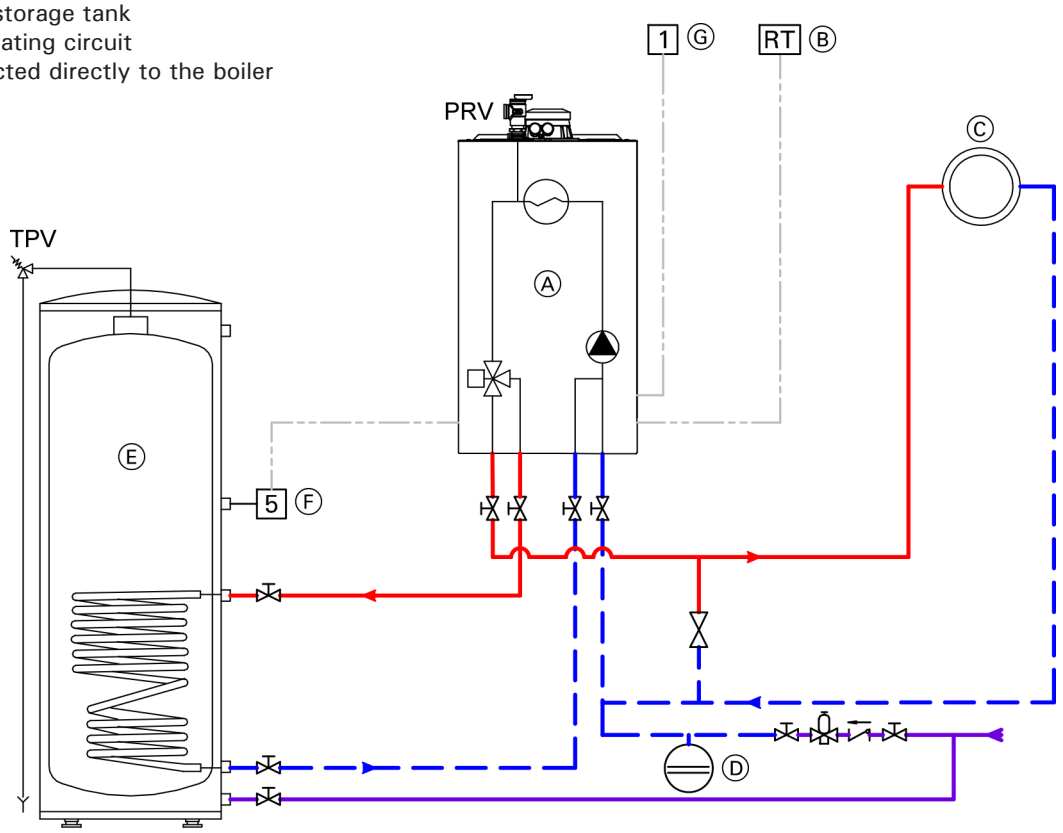

Legend

PRV Pressure relief valve
TPV Temperature and pressure relief valve
Ⓐ Vitodens 100-W gas fired condensing boiler
Ⓑ External boiler controller with room thermostat connection (field supplied)
Ⓒ Heating circuit
Ⓓ Expansion tank
Ⓔ DHW storage tank
Ⓕ DHW tank temperature sensor (or DHW temperature switch)
Ⓖ Outdoor temperature sensor

Note: Refer to the residual head curves on page 32.
The use of a low-loss header is recommended if the water flow rate is above or below the operating range.
The low-loss header is available as accessory part.

IMPORTANT

Ensure that a pressure activated by-pass is installed if there are system component(s) in Ⓒ that may isolate the flow to the pump.

Maximum Flow Rates

Model B1HE		**85**	**120**	**150**	**199**
Output	MBH	80	113	141	187
Δ t					
30°F (17°C) rise	GPM (L/h)	5.3 (1204)*	7.5 (1703)*	9.4 (2135)*	12.5 (2839)*
35°F (19.5°C) rise	GPM (L/h)	4.6 (1045)	6.5 (1476)*	8.1 (1840)	10.7 (2430)*
40°F (22°C) rise	GPM (L/h)	4.0 (908)	5.7 (1295)	7.1 (1613)	9.4 (2135)

* Requires low loss header or closely spaced tees.

System Layout 2

Vitodens 100-W, B1HE 85, 120, 150, 199 with...
- DHW storage tank
- low-loss header
- one heating circuit

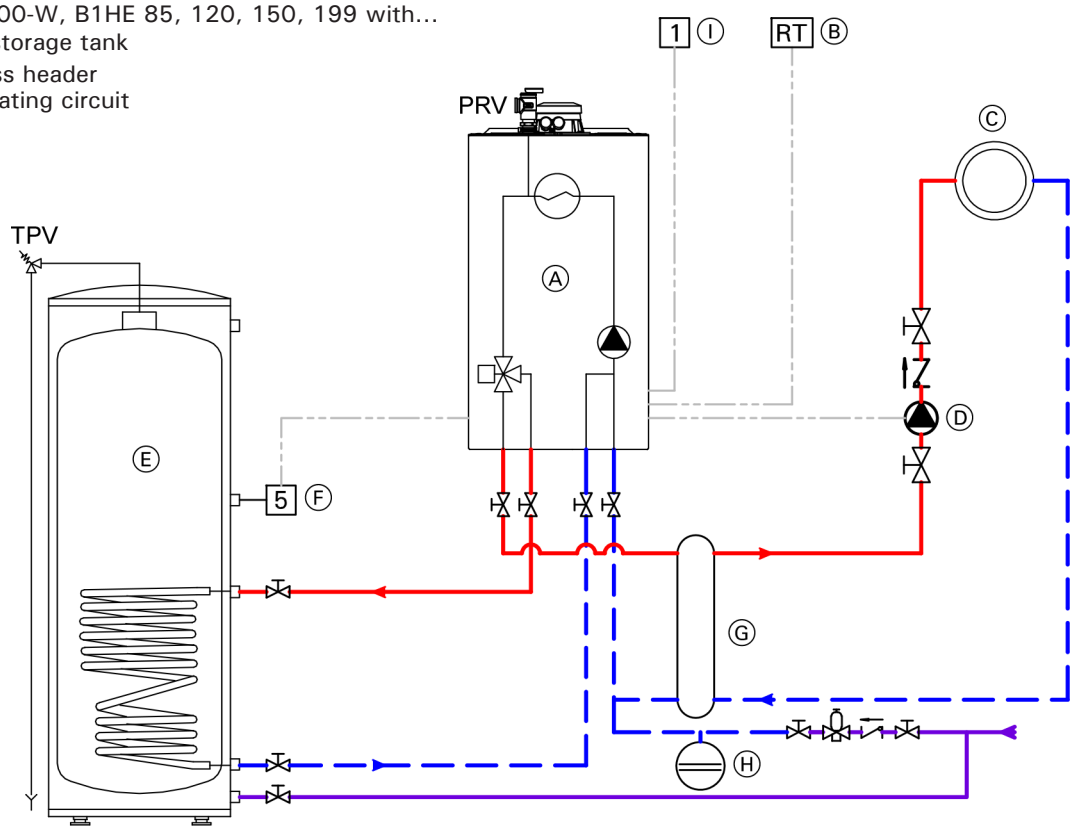

Legend
PRV Pressure relief valve
TPV Temperature and pressure relief valve
Ⓐ Vitodens 100-W gas-fired condensing boiler
Ⓑ External boiler controller with room thermostat connection (field supplied)
Ⓒ Heating circuit
Ⓓ Heating circuit pump P2
Ⓔ DHW storage tank
Ⓕ DHW tank temperature sensor (or DHW temperature switch)
Ⓖ Low-loss header
Ⓗ Expansion tank
Ⓘ Outdoor temperature sensor

Note: Refer to the residual head curves on page 32.
The use of a low-loss header is recommended if the water flow rate is above or below the operating range.
The low-loss header is available as accessory part.

IMPORTANT

DHW supply and return piping between boiler DHW connections and the Viessmann DHW tank connections, shall be a minimum of 1¼ in. nominal pipe diameter.

This ensures that the head of the pump is fully utilized to overcome the resistance of the DHW heat exchanger coil and to provide sufficient water flow to the boiler heat exchanger.

In non-Viessmann DHW tank applications, perform, in addition to the above, accurate calculations for DHW tank coil pressure drop versus boiler pump head to ensure sufficient water flow to the boiler heat exchanger.

Failure to heed the above instructions may cause boiler short-cycling and inadequate DHW supply.

Maximum Flow Rates

Model B1HE		**85**	**120**	**150**	**199**
Output	MBH	80	113	141	187
Δ t					
30°F (17°C) rise	GPM (L/h)	5.3 (1204)*	7.5 (1703)*	9.4 (2135)*	12.5 (2839)*
35°F (19.5°C) rise	GPM (L/h)	4.6 (1045)	6.5 (1476)*	8.1 (1840)	10.7 (2430)*
40°F (22°C) rise	GPM (L/h)	4.0 (908)	5.7 (1295)	7.1 (1613)	9.4 (2135)

* Requires low loss header or closely spaced tees.

System Layout 3

Vitodens 100-W, B1HE 85, 120, 150, 199 with
- DHW storage tank
- closely spaced tees
- one heating circuit

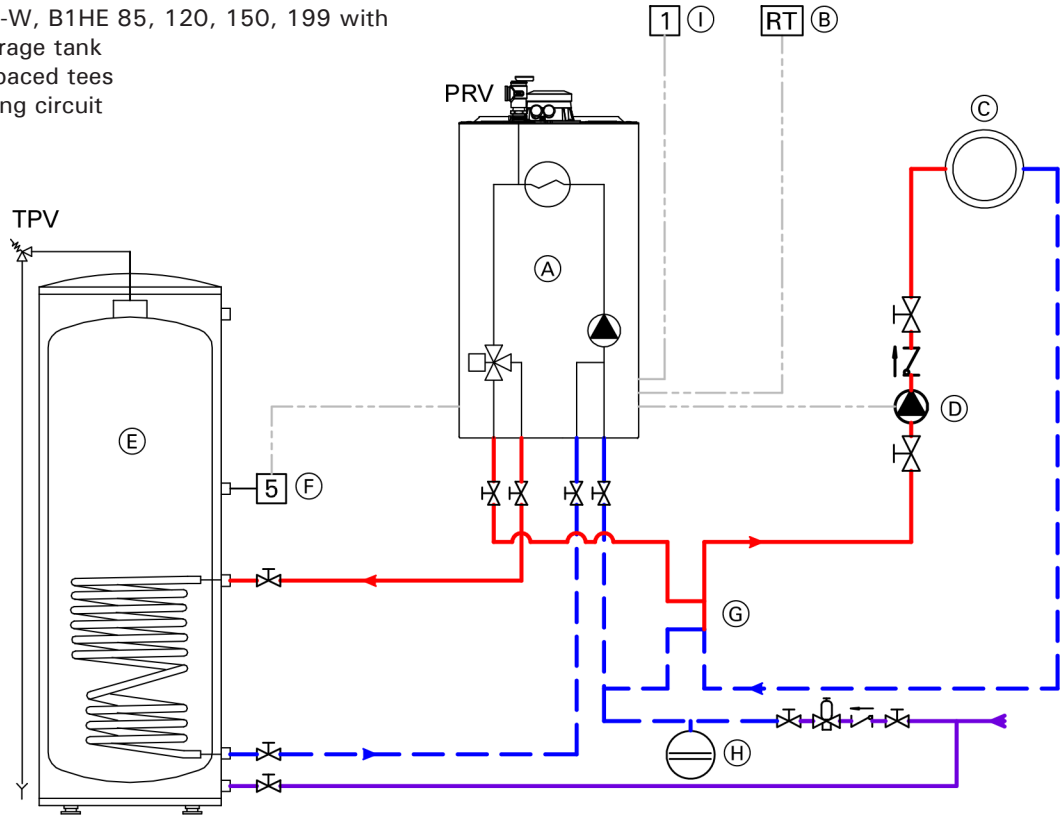

Legend

PRV Pressure relief valve
TPV Temperature and pressure relief valve
Ⓐ Vitodens 100-W gas-fired condensing boiler
Ⓑ External boiler controller with room thermostat connection (field supplied)
Ⓒ Heating circuit
Ⓓ Heating circuit pump P2
Ⓔ DHW storage tank
Ⓕ DHW tank temperature sensor (or DHW temperature switch)
Ⓖ Closely spaced tees, 4x pipe Ø or 12 in. (305 mm) *1
Ⓗ Expansion tank
Ⓘ Outdoor temperature sensor

*1 A low-loss header offers additional benefits not provided by a pair of closely spaced tees. Viessmann strongly recommends and prefers the use of a low-loss header over closely spaced tees.

Note: Refer to the residual head curves on page 32.
The use of a low-loss header is recommended if the water flow rate is above or below the operating range.
The low-loss header is available as accessory part.

IMPORTANT

DHW supply and return piping between boiler DHW connections and the Viessmann DHW tank connections, shall be a minimum of 1¼ in. nominal pipe diameter.

This ensures that the head of the pump is fully utilized to overcome the resistance of the DHW heat exchanger coil and to provide sufficient water flow to the boiler heat exchanger.

In non-Viessmann DHW tank applications, perform, in addition to the above, accurate calculations for DHW tank coil pressure drop versus boiler pump head to ensure sufficient water flow to the boiler heat exchanger.

Failure to heed the above instructions may cause boiler short-cycling and inadequate DHW supply.

Maximum Flow Rates

Model B1HE		**85**	**120**	**150**	**199**
Output	MBH	80	113	141	187
Δ t					
30°F (17°C) rise	GPM (L/h)	5.3 (1204)*	7.5 (1703)*	9.4 (2135)*	12.5 (2839)*
35°F (19.5°C) rise	GPM (L/h)	4.6 (1045)	6.5 (1476)*	8.1 (1840)	10.7 (2430)*
40°F (22°C) rise	GPM (L/h)	4.0 (908)	5.7 (1295)	7.1 (1613)	9.4 (2135)

* Requires low loss header or closely spaced tees.

System Layout 4

Vitodens 100-W, B1KE 120, 199 with
- one heating circuit
  connected directly to the boiler

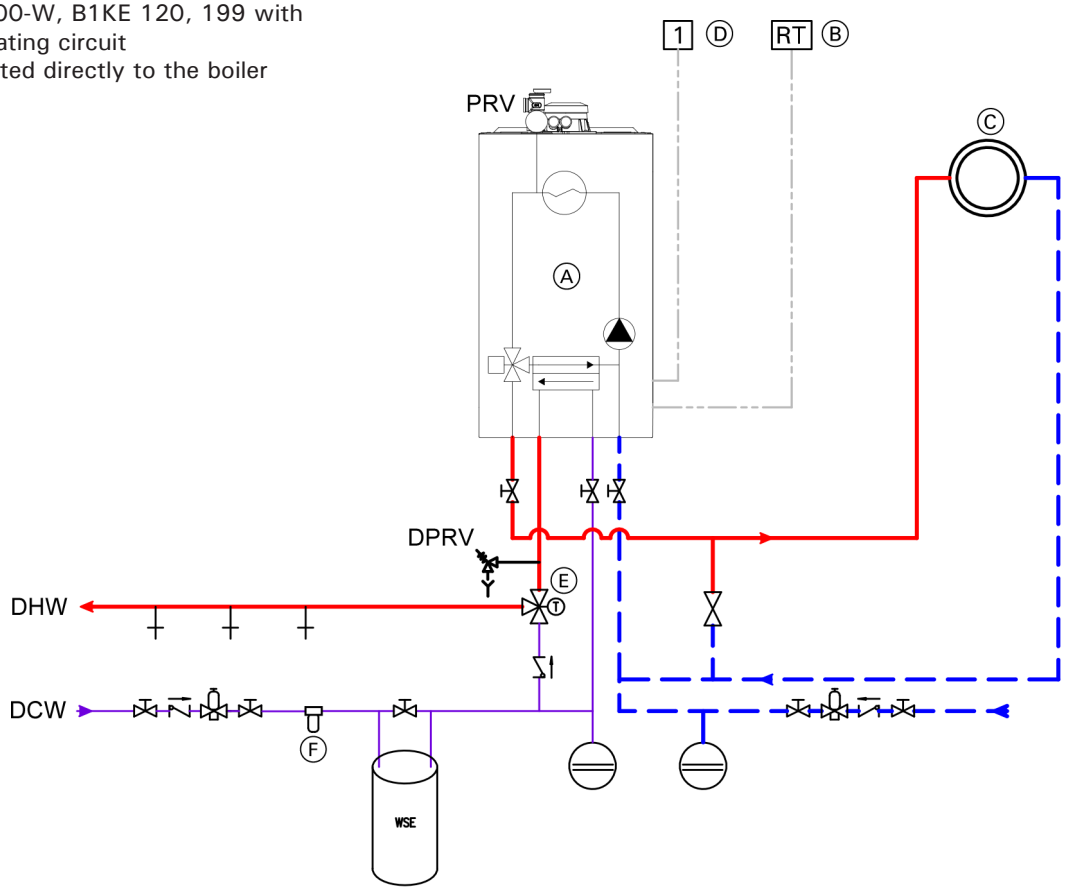

Legend

PRV Pressure relief valve (boiler)
DPRV Pressure relief valve (DHW 150 psi)
WSE Water softener equipment
DHW Domestic hot water
DCW Domestic cold water
Ⓐ Vitodens 100-W gas-fired condensing boiler
Ⓑ External boiler controller with room thermostat connection (field supplied)
Ⓒ Heating circuit
Ⓓ Outdoor temperature sensor
Ⓔ DHW tempering valve (field supplied)
Ⓕ Domestic water sediment filter (field supplied)

Note: Refer to the residual head curves on page 32.
The use of a low-loss header is recommended if the water flow rate is above or below the operating range.
The low-loss header is available as accessory part.

Maximum Flow Rates

Model B1KE		**120**	**199**
Output	MBH	113	187
Δ t			
30°F (17°C) rise	GPM (L/h)	7.5 (1703)*	12.5 (2839)*
35°F (19.5°C) rise	GPM (L/h)	6.5 (1476)*	10.7 (2430)*
40°F (22°C) rise	GPM (L/h)	5.7 (1295)	9.4 (2135)

* Requires low loss header or closely spaced tees.

System Layout 5

Vitodens 100-W, B1KE 120, 199 with...
- low-loss header
- one heating circuit

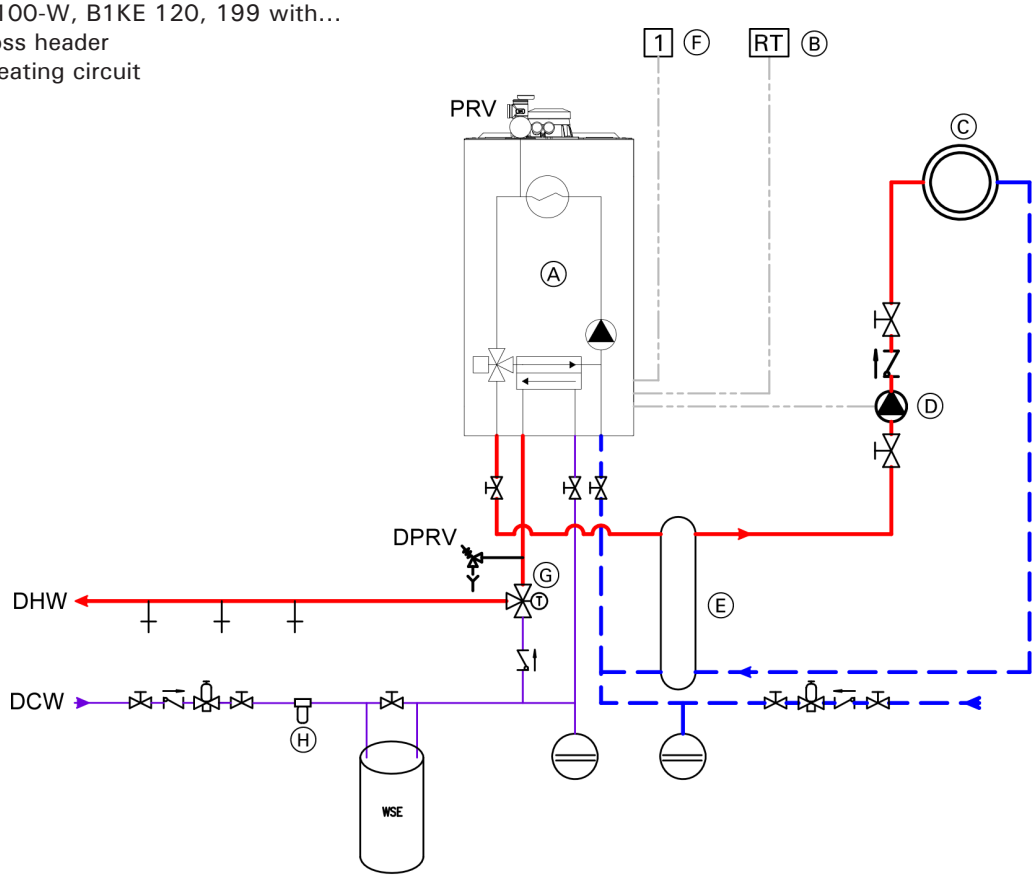

Legend

PRV Pressure relief valve (boiler)
DPRV Pressure relief valve (DHW 150 psi)
WSE Water softener equipment
DHW Domestic hot water
DCW Domestic cold water
Ⓐ Vitodens 100-W gas-fired condensing boiler
Ⓑ External boiler controller with room thermostat connection (field supplied)
Ⓒ Heating circuit
Ⓓ Heating circuit pump P2
Ⓔ Low-loss header (there is no LLH temperature sensor available for the B1KE)
Ⓕ Outdoor temperature sensor
Ⓖ DHW tempering valve (field supplied)
Ⓗ Domestic water sediment filter (field supplied)

Note: Refer to the residual head curves on page 32.
The use of a low-loss header is recommended if the water flow rate is above or below the operating range.
The low-loss header is available as accessory part.

Maximum Flow Rates

Model B1KE		**120**	**199**
Output	MBH	113	187
Δ t			
30°F (17°C) rise	GPM (L/h)	7.5 (1703)*	12.5 (2839)*
35°F (19.5°C) rise	GPM (L/h)	6.5 (1476)*	10.7 (2430)*
40°F (22°C) rise	GPM (L/h)	5.7 (1295)	9.4 (2135)

* Requires low loss header or closely spaced tees.

System Layout 6

Vitodens 100-W, B1KE 120, 199 with
- closely spaced tees
- one heating circuit

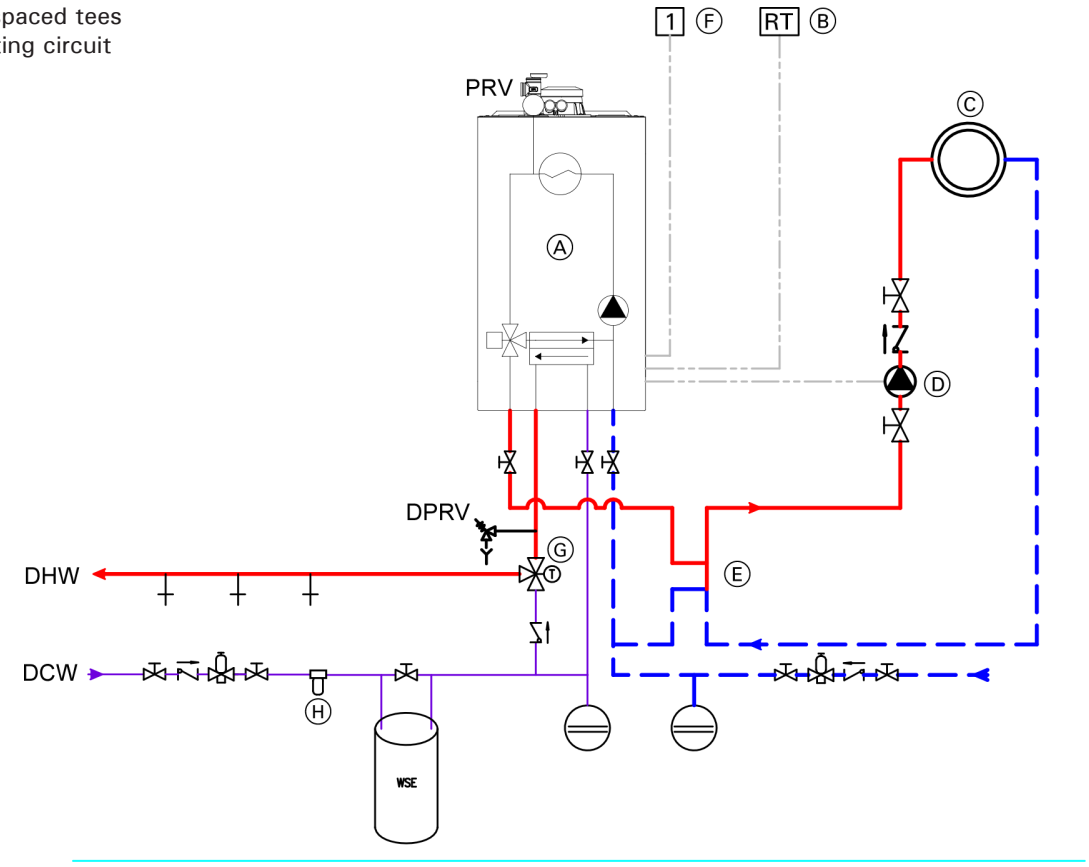

Legend

PRV Pressure relief valve (boiler)
DPRV Pressure relief valve (DHW 150 psi)
WSE Water softener equipment
DHW Domestic hot water
DCW Domestic cold water
Ⓐ Vitodens 100-W gas-fired condensing boiler
Ⓑ External system controller with room thermostat connection (field supplied)
Ⓒ Heating circuit
Ⓓ Heating circuit pump P2
Ⓔ Closely spaced tees, 4x pipe Ø or 12 in. (305 mm)*1
Ⓕ Outdoor temperature sensor (OTS)
Ⓖ DHW tempering valve (field supplied)
Ⓗ Domestic water sediment filter (field supplied)

Note: Refer to the residual head curves on page 32.
The use of a low-loss header is recommended if the water flow rate is above or below the operating range.
The low-loss header is available as accessory part.

*1 A low-loss header offers additional benefits not provided by a pair of closely spaced tees. Viessmann strongly recommends and prefers the use of a low-loss header over closely spaced tees.

Maximum Flow Rates

Model B1KE		**120**	**199**
Output	MBH	113	187
Δ t			
30°F (17°C) rise	GPM (L/h)	7.5 (1703)*	12.5 (2839)*
35°F (19.5°C) rise	GPM (L/h)	6.5 (1476)*	10.7 (2430)*
40°F (22°C) rise	GPM (L/h)	5.7 (1295)	9.4 (2135)

* Requires low loss header or closely spaced tees.

Boiler with Low Water Cut-off (remote-mounted, field supplied)

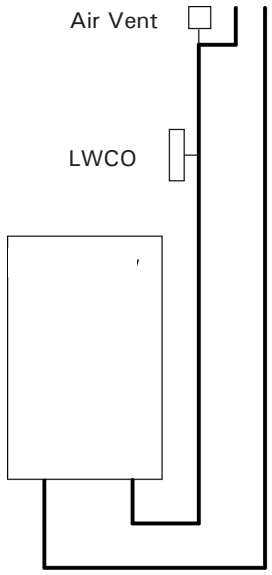

Boiler below radiation

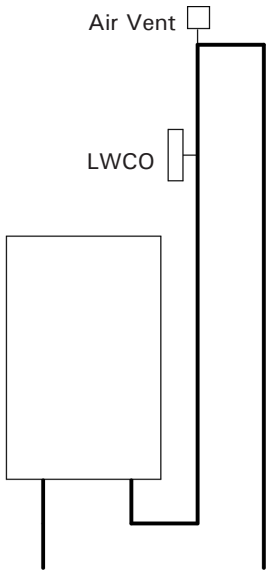

Boiler above radiation

A low water cut-off may be required by local codes.
Do not install an isolation valve between boiler and low water cut-off.
Follow the installation instructions of the low water cut-off manufacturer.
For low water cut-off wiring information specific to your application, refer to applicable wiring diagram on the boiler front panel.
Note: The Vitodens 100-W boiler has a built-in flow switch, which may be accepted by local codes in lieu of a low water cut-off.

Commissioning the System with the Commissioning Assistant

IMPORTANT

Only commission the boiler with a fully filled siphon trap. Check that the siphon trap has been filled with water.

Commissioning assistant

1. Open the gas shut-off valve.
2. ■ If the boiler has not been switched on yet:
   Turn on the ON/OFF switch.
   The commissioning assistant starts automatically.
   ■ If the boiler has already been switched on:
   See chapter “Calling up the commissioning assistant at a later point”, page 41.
3. Commission the boiler and follow the commissioning assistant. See the overview below.
   Note: Depending on the type of boiler, the accessories connected and other settings, not all menu points will be displayed.
   Note: After the commissioning assistant has finished, check that the actuators are connected and operating correctly. Start the actuator test.

Commissioning assistant sequence	Explanations and references
Commissioning	
Language	Factory setting: English
With app	The boiler automatically switches on the WiFi access point. Further commissioning steps according to the instructions of the ViGuide mobile app **Note:** Apps for commissioning and service are available for iOS and Android devices. Download on the App Store / GET IT ON Google Play
With HMI	If commissioning is to be carried out at the HMI (Human Machine Interface or commonly known as the display of the boiler).
Units ■ Temperature ■ Length	Select the required units of measurement (e.g. °C/m or °F/ft)
Date ■ Format ■ Date setting ■ Automatic summer/winter changeover	Date format : DD.MM.YYYY, MM/DD/YYYY or YYYY-MM-DD Automatic summer/ winter changeover: setting whether summer/ wintertime is to be taken into account.(Available only on ViGuide app.) Factory setting: Summer/wintertime enabled
Time ■ Format ■ Time changeover	Time: 12/24 hour clock
Filling and purging	In filling mode, the pumps run and the diverter stays in center position. In purging mode, the pump cycles on and off and the diverting valve moves through DHW, center and heating positions.
Gas type	Factory Setting: Natural Gas. If operating with Propane, switch to “Propane”
Altitude	Set the elevation of the boiler installation site
Continue in the commissioning assistant with Yes or end commissioning with No.	

Commissioning the System with the Commissioning Assistant *(continued)*

Commissioning assistant sequence	Explanations and references
Operating mode	■ Weather-compensated The outside temperature sensor must be connected, operates at weather-compensated supply temperature according to heating curve. ■ Constant operation Operation with constant supply temperature.
System scheme DHW ■ Not installed ■ Cylinder with one sensor with /without DHW recirculation pump ■ DHW comfort function ■ Tank with temperature switch (Aquastat) with/without DHW recirculation pump	Settings for DHW heating according to the system components System without DHW heating System with DHW tank with 1 tank temperature sensor Only for B1KE series boilers (not adjustable) No demand from Aquastat = no frost protection Demand from Aquastat = demand for target value
Low loss header/buffer tank ■ Not installed ■ Low loss header, heating only ■ DHW heating upstream of low loss header ■ DHW heating downstream of low loss header	Settings for the consumer circuits according to the system components. **Note:** All system schemes with low loss header without temperature sensor for low loss header. There is no low loss header or heating water buffer tank in the system. System with low loss header, without DHW heating. DHW heating with e.g. separate DHW tank connected upstream of the low loss header. DHW heating with e.g. separate DHW tank connected downstream of the low loss header.
Plug 96 ■ Heat demand (“call for heat”)	If a contact has been connected to plug 96.
Maintenance	
Interval in burner hours run until next maintenance	Interval adjustable in steps of 100 h.
Interval until next mainenance	Interval adjustable to 3, 6, 12,18 or 24 months.
The boiler control carries out a restart.	

Switching WiFi ON/OFF

The boiler is equipped with an integrated WiFi communication module with extended rating plate.
The internal communication module supports commissioning of the boiler with the “Vitoguide mobile app”, connectivity with the “ViCare app”, and connection to the “Vitoguide” digital service centre.
The access details required for establishing a connection are recorded in the form of an access code with “WiFi symbol”. Three copies of this code are located on the rear of the programming unit.
Before installing the programming unit, remove the access code labels from the rear. For commissioning, affix one label to the front of the boiler.
Switch on the WiFi connection and establish a connection to the router; see also page 29.
Activating the internet connection:

Operating instructions

Place WiFi label here

Affix a further credentials label here, so it can be found for subsequent use:

Affix a label in the operating instructions.

Calling up the commissioning assistant at a later point

If you need to continue commissioning later, the commissioning assistant can be reactivated at any time.

Tap the following buttons:

1. ≡ and OK simultaneously for approx. 4 sec, then release.
2. Use ∧∨ to select “Basic settings”.
3. OK
4. Use ∧∨ to select “Commissioning assistant”.
5. OK

Filling the Heating System

Water connections

Vitodens 100-W boilers can be used in any fully pumped hot water heating system.
Minimum system pressure is 0.8 bar (12 psig).
Chemical corrosion protection products: Corrosion does not typically occur in sealed heating systems which have been correctly installed and are correctly operated.
Many manufacturers of plastic pipes recommend the use of chemical additives. In this case, only those commercially available corrosion protection products approved for boilers with domestic hot water heating via single-wall heat exchangers (instantaneous plate heat exchangers or DHW tanks) must be used.

Underfloor heating systems

For underfloor heating systems Viessmann recommends the use of plastic tubing with an oxygen diffusion barrier in order to prevent the diffusion of oxygen through tubing.

If plastic tubing without an oxygen diffusion barrier is used in underfloor heating systems, Viessmann recommends that such systems be separated from the boiler with a heat exchanger.

Water Conditions for DHW B1KE

Media: pH value 6.5 to 12, glycol max. 30%

DHW (max. hardness): Chloride up to 250 mg/L

Hardness up to 358 ppm
(= max. 0.278 kg/m³ lime deposit)

Water quality

Treatment for boiler feed water should be considered in areas of known problems, such as where a high mineral content and hardness exist. In areas where freezing might occur, an antifreeze may be added to the system water to protect the system. Please adhere to the specifications given by the antifreeze manufacturer.

Do not use automotive silicate based antifreeze. Please observe that an antifreeze/water mixture may require a backflow preventer within the automatic water feed and influence components such as diaphragm expansion tanks, radiation, etc. Maximum antifreeze content is 50% for the B1HE 85, 120, 150, 199 and 30% for the B1KE 120 and 199. Do not use antifreeze other than specifically made for hot water heating systems.

The system may also contain components which might be negatively affected by antifreeze.

Check total system frequently when filled with antifreeze. Advise system operator/ultimate owner that system is filled with a glycol mix.

The heating contractor must provide a MSDS (Material Safety Data Sheet) for the antifreeze used to the system operator/ultimate owner.

Total permissible hardness of the fill and top-up water for the heating system

Total heating output	Specific heating volume					
MBH	< 5 USG per 3412 BTU		≥5 USG per 3412 BTU to < 13 USG per 3412 BTU		≥13 USG per 3412 BTU	
≤170	300 ppm	17.5 gpg	200 ppm	11.7 gpg	2 ppm	0.11 gpg
> 170 to ≤682	200 ppm	11.7 gpg	150 ppm	8.8 gpg	2 ppm	0.11 gpg
> 682 to ≤2050	150 ppm	8.8 gpg	2 ppm	0.11 gpg	2 ppm	0.11 gpg
> 2050	2 ppm	0.11 gpg	2 ppm	0.11 gpg	2 ppm	0.11 gpg

ppm - parts per million
gpg - grains per gallon

Filling the Heating System *(continued)*

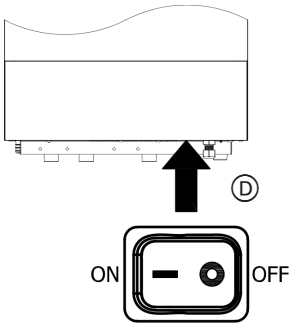

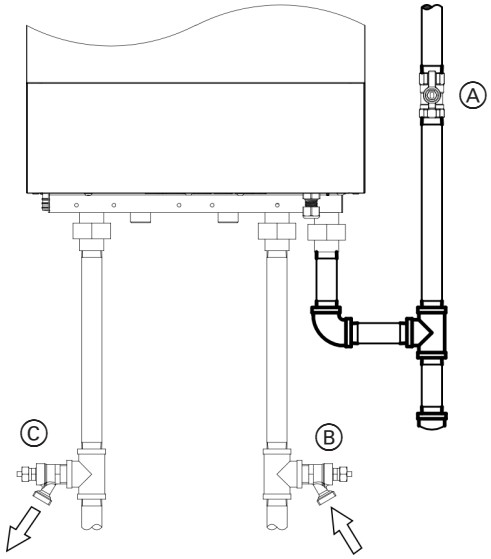

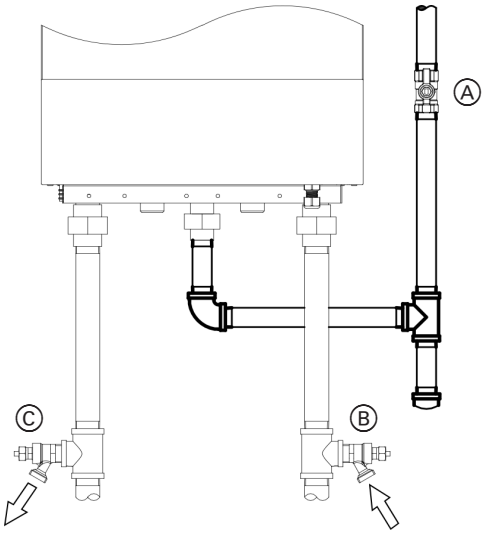

Valves/fittings on site:
- Ⓐ Gas shut-off valve
- Ⓑ Heating return with fill valve
- Ⓒ Heating supply with drain valve
- Ⓓ ON/OFF switch

1. Check the pre-charge pressure of the expansion tank.
2. Close gas shut-off valve Ⓐ.
3. Fill the heating system at boiler fill valve Ⓑ in the heating return (on site). Minimum system pressure > 12 psi (0.8 bar). Check the system pressure at pressure gauge. The indicator must be in the green band. If necessary, open the system air vents.
   Note: Pressure spikes may occur during filling, ensure pressure does not exceed pressure relief valve rating.
4. Fit hose to drain valve Ⓒ. Route the hose into a suitable container or drain outlet.
5. Close the shut-off valves on the heating water side.
6. Open drain valve Ⓒ and fill valve Ⓑ in the heating return. Vent (flush) until no more air noise is audible.
   Note: Required minimum flow rate for flushing: 800 L/h for B1HE/KE 85/120 boilers; 1100 L/h for B1HE/KE 150/199 boilers
7. Activate the filling function (see commissioning assistant or following chapter).
8. Close drain valve Ⓒ and fill valve Ⓑ. Check the system pressure at pressure gauge. The indicator must be in the green band.
9. Open the shut-off valves on the heating water side.

Activating the filling function

If the filling function is to be activated after commissioning. Tap the following buttons:

1. ≡ and OK simultaneously for approx. 4 sec, then release.
2. Use ∧∨ to select “Basic settings”.
3. OK
4. Use ∧∨ to select “Commissioning assistant”.
5. OK
6. ∧∨ for “Next” and OK until “Filling” appears.
7. OK
   The filling function ends automatically after 20 min or when you tap OK.

Checking All Connections on the Heating Water and DHW Sides for Leaks

WARNING

Risk of electric shock from escaping heating water or DHW.
When commissioning and after carrying out maintenance work, check all water side connections for leaks.

Check heating system and domestic hot water connections (if applicable). Ensure all connections are pressure tight.
Correct any leaks found on fittings, pumps, valves, etc.

Purging the Heating System

1. Close the gas shut-off valve and switch the boiler ON.
2. Open the automatic air vent valve.
   Note: To use the purging function, an automatic air vent valve must be installed on site.
3. Activate the purging program.
4. Adjust the system pressure.
   The boiler pressure gauge shows the system pressure.
5. Disconnect the supply hose from the boiler drain and fill valve.
6. Open the gas shut-off valve.

Activating the purging function

If the purging function is to be activated after commissioning.

Tap the following buttons:

1. ≡ and OK simultaneously for approx. 4 sec, then release.
2. Use ∧∨ to select “Basic settings”.
3. OK
4. Use ∧∨ to select “Commissioning assistant”.
5. OK
6. ∧∨ for “Next” and OK until “Purging” appears.
7. OK
   The purging function is activated.
   The purging function ends automatically after 20 min or when you tap OK.

Checking the Gas Type

The Vitodens 100-W boiler is for use with gases whose characteristics fall within the following ranges. Do not use any other types of gas.

	Natural gas	Liquid Propane gas
Heating value (gross) Btu/ft^3	970 to 1100	2466 to 2542
Specific gravity	0.57 to 0.70	1.522 to 1.574
Ultimate carbon dioxide (CO_2) %	11.7 to 12.2	13.73 to 13.82

1. Verify that the fuel type listed on the boiler rating plate is the correct type for the installation being attempted.
2. Once verified, record the fuel type in Maintenance Record on page 99.

Converting the Gas Type for Operation with LPG

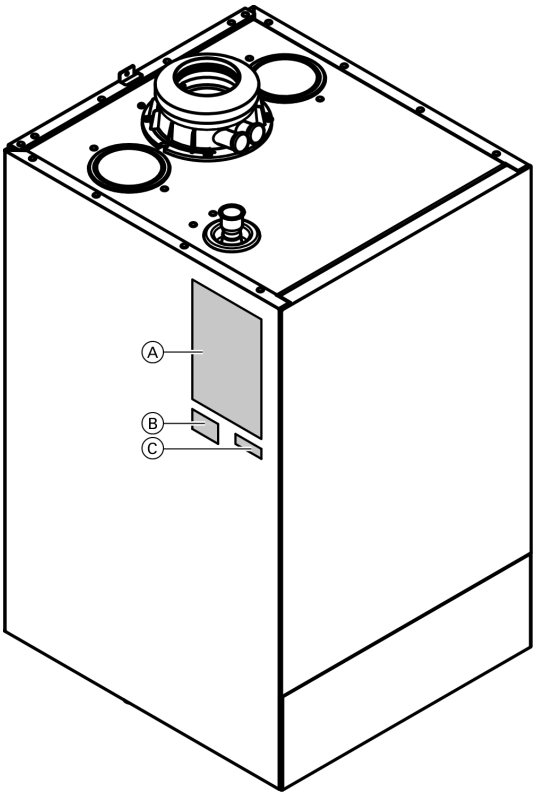

1. To change the gas type on the control unit, see "Commissioning the system with the commissioning assistant"
   Note: No mechanical adjustments are made to the gas solenoid valve.
2. Affix labels as shown.

Legend
Ⓐ CSA Rating Plate
Ⓑ Field Conversion Label
Ⓒ Gas Type Label

Removing the Front Panel

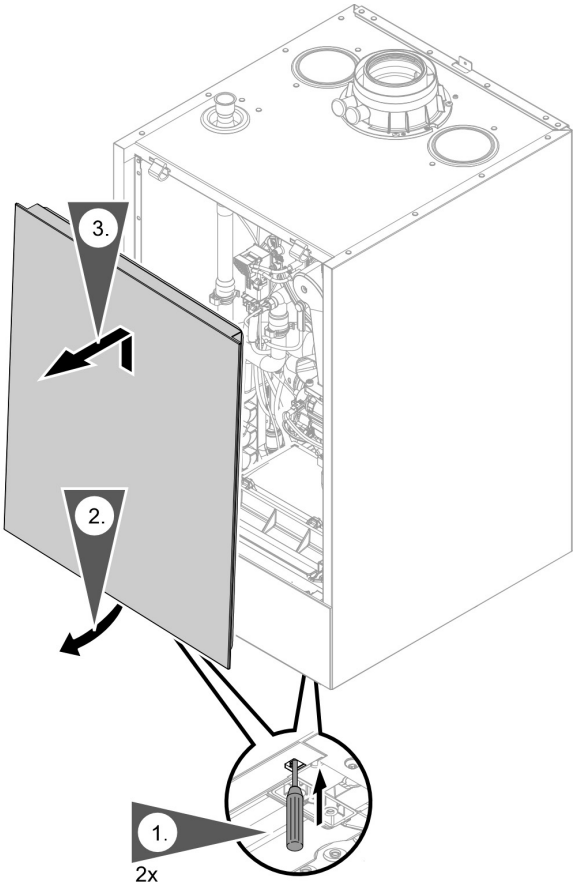

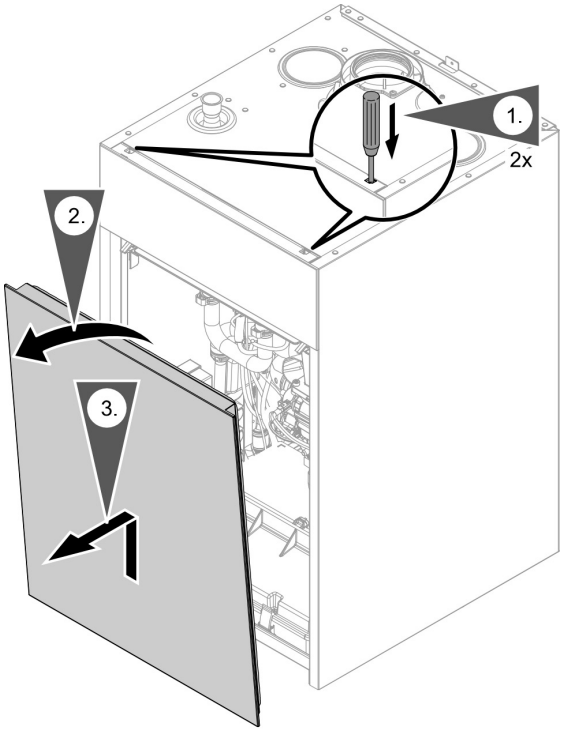

Moving the Programming Unit to the Maintenance Position

To facilitate certain maintenance tasks, move the programming unit up or down, depending where it is located.

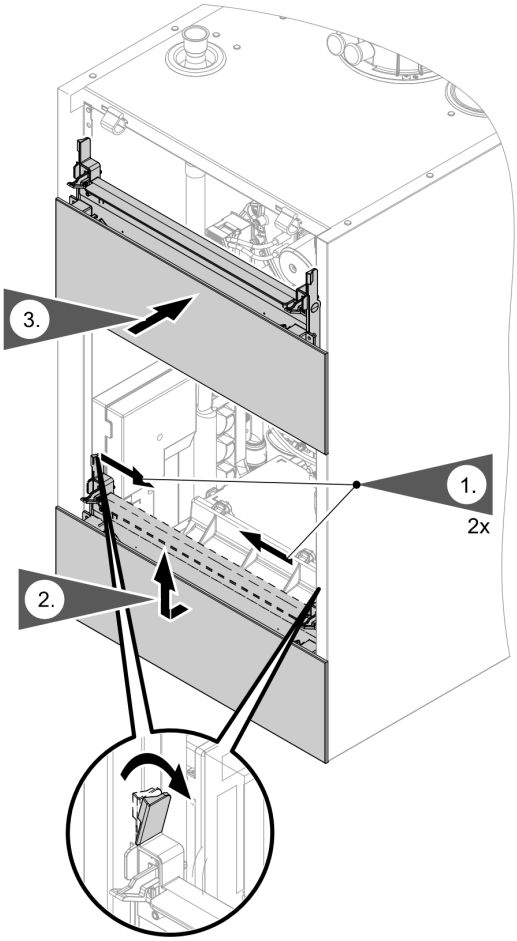

HMI mounted at the bottom

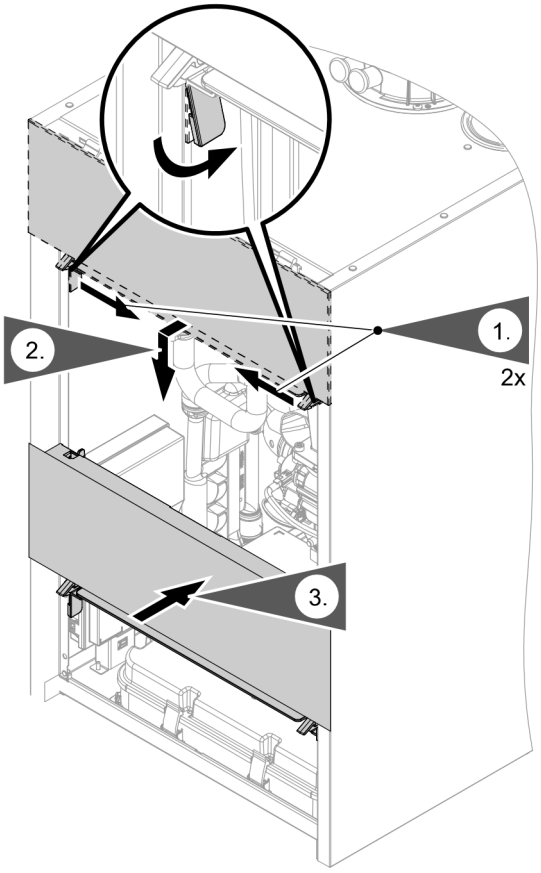

HMI mounted at the top

Do not disconnect the plug from the mounting panel.
Do not alter where and how the cable is secured (fixing point of the cable tie).

Checking the Static Pressure and Supply Pressure

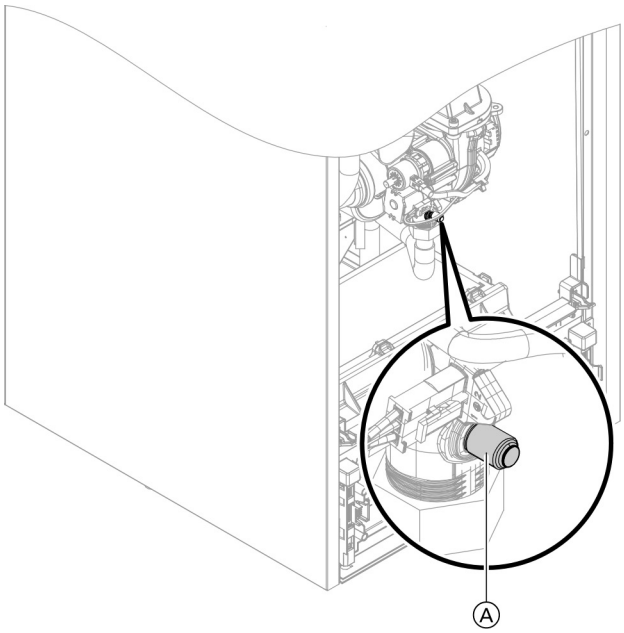

Legend

Ⓐ Inlet gas pressure measurement port

Measuring running gas supply pressure, using test nipple Ⓐ

Static pressure

1. To measure static and/or running pressure remove burner cover panel as per the removal instructions on page 45.
2. Close gas shutoff valve.
3. Loosen screw in test nipple Ⓐ on the gas combination valve, do not remove completely. Connect calibrated manometer.
4. Open the gas shutoff valve.
5. Measure static pressure. Values must be:
   - 14 “w.c. max. for NG
   - 14 “w.c. max. for LPG
6. Enter measured value into Maintenance Record on page 99 in this manual.
7. Start up boiler, using the on/off service switch (field supplied).

IMPORTANT

A CO_2 measurement (see page 59) must be taken before and after working on gas appliances to eliminate health risks and to guarantee the satisfactory condition of the system.

8. All measurements must be made under high-fire conditions.
   Note: Use suitable measuring instruments calibrated with a minimum resolution of 0.04 “w.c. for measuring the running pressure.

Measure the running pressure; value must be:

Running supply pressure with Natural gas	Running supply pressure with Liquid propane gas	Corrective action
under 4 “w.c.	under 10 “w.c.	Do not attempt adjustment. Call local gas utility to increase pressure.
4 to 14 “w.c.	10 to 14 “w.c.	Start up boiler.
over 14 “w.c.	over 14 “w.c.	Do not attempt adjustment. Call local gas utility to decrease pressure. Boiler valve must not be exposed to pressure over 14 “w.c.

9. Enter gas type into Maintenance Record on page 99 in this manual.
10. Switch off the heating system ON/OFF service switch (boiler is shut down), close the gas shut-off valve, remove the manometer and re-tighten the screw in the test nipple Ⓐ.
11. Open gas shutoff valve and check that the test nipple Ⓐ and all gas connections are gas-tight.

⚠ WARNING

Ensure that there is no open flame in the room.

⚠ WARNING

Never purge a gas line into a combustion chamber. Never use matches, candles, flame, or other sources of ignition for purpose of checking leakage. Use a soap-and-water solution to check for leakage. A failure to follow this warning could result in fire, explosion, personal injury, or death.

Supply pressure (flow pressure)		Measures
For natural gas	For LPG	
< 4” w.c.	< 10” w.c.	Do not start the boiler. Notify the gas supply utility or LPG supplier.
4 - 14” w.c.	10 - 14” w.c.	Start the boiler.
> 14” w.c.	> 14” w.c.	Install a separate gas pressure governor upstream of the system. Set the pre-charge pressure to 4” w.c. for natural gas and 10” w.c. for LPG. The gas solenoid valve must not be exposed to pressures above 14 ”w.c.

Function Sequence and Possible Faults

		Display		Measure
Control unit issues a call for heat	No →			Increase target value. Ensure heat transfer.
↓ Yes				
Minimum flow rate reached	No →			Increase flow rate
↓				
Fan starts	No →	Fault F.59, F.457	→	Check the fan connecting cables. Check the fan power supply.
↓ Yes				
Ignition	No →	Fault F.359	→	Check ignition module (control voltage 120 V across plugs "X18.1" and "X18.3" on the burner control units). Check the gas supply.
↓ Yes				
Gas solenoid valve opens	No →	Fault F.357	→	Check the gas supply pressure.
↓ Yes				
Ionization current builds	No →	Fault F.369, F.380	→	Check gap between ionization electrode and burner gauze assembly. Purge the gas line.
↓ Yes				
Burner in operation	No →	Shuts down below the target boiler water temperature and restarts immediately.	→	Check the flue system for tightness (flue gas recirculation). Check gas flow pressure.
↓ Yes				
Automatic calibration of the combustion controller	No →	Fault F.62, F.373	→	Ensure adequate heat transfer. Reset the appliance.
		Fault F.346, F.377	→	Check gap between ionization electrode and burner gauze assembly. Check flue system. Remove flue gas recirculation if necessary. Reset the appliance. Operating instructions

For further details regarding faults, see “Troubleshooting”.

6167 818 - 22

Seal Test on Coaxial Flue System (annular gap check)

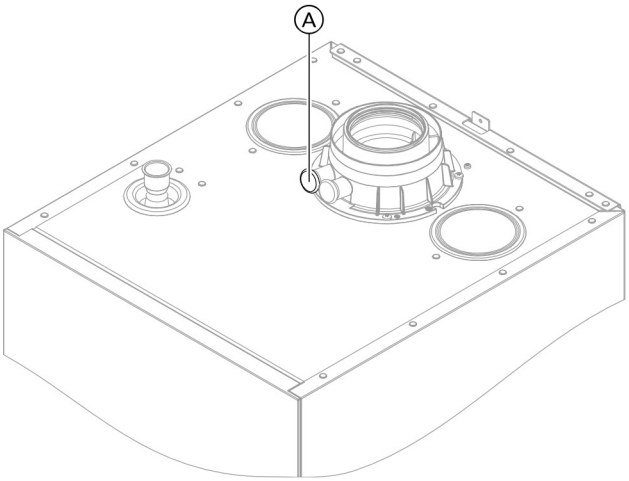

Legend
Ⓐ Combustion air aperture

For sealed combustion, coaxial vent only
Viessmann strongly recommends that the heating contractor perform a simplified leak test during boiler start-up. For this purpose it is sufficient to measure the CO_2 concentration of the combustion air in the coaxial gap of the air intake pipe. The vent pipe is considered sufficiently leak-proof if a CO_2 concentration in the combustion air no higher than 0.2% or an O_2 concentration no lower than 20.6% is measured.

If higher CO_2 values or lower O_2 values are measured, check venting system thoroughly.

Note: The vent pipe adaptor comes with two measurement ports, one for combustion air intake measurement and one for flue gas measurement.

Note: This test is not applicable for single-wall venting systems (non-sealed combustion).

IMPORTANT

If the test port is not sealed, combustion air is drawn in from the room. After the leak test, re-seal the test port with the plug.

Removing the Burner

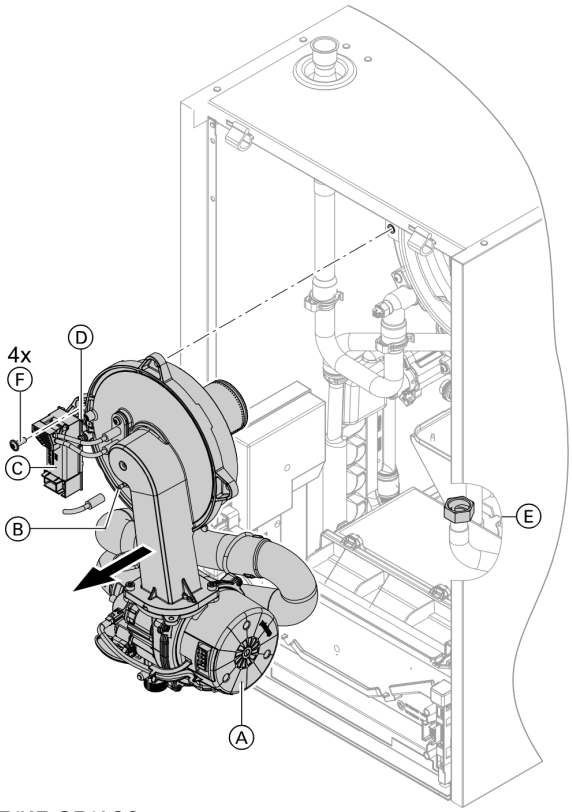

B1HE/KE 85/120

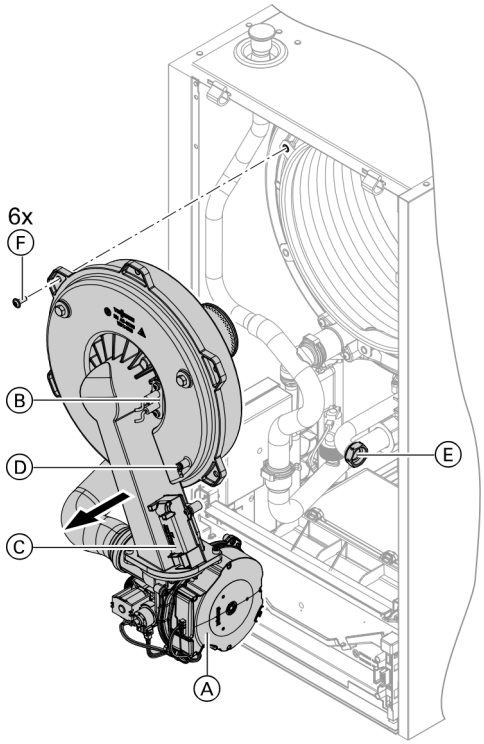

B1HE/KE 150/199

Note: If the programming unit is located at the top: Move the programming unit down into the maintenance position. See page 46.

1. Turn off the ON/OFF switch.
2. Close the gas shut-off valve and safeguard against reopening.
3. Disconnect cables and leads from:
   - Fan motor Ⓐ (2 plugs)
   - Ionization electrode Ⓑ
   - Ignition unit Ⓒ
   - Ground Ⓓ
4. Undo gas supply pipe fitting Ⓔ.
5. Undo screws Ⓕ and remove the burner.
   Note: Cover gas connection Ⓔ (B1HE/KE 85/120) so that no small parts can fall into it.

IMPORTANT

Always hold the fitting of the gas connection pipe with a suitable open-ended wrench.
Use a two handed wrench method when tightening fittings, and ensure that the corragated gas line does not twist.
The gas pipe must not touch any other components.
Do not use pliers or similar tools.

Checking the Burner Gasket and Flame Body Assembly

B1HE/KE 85 and 120

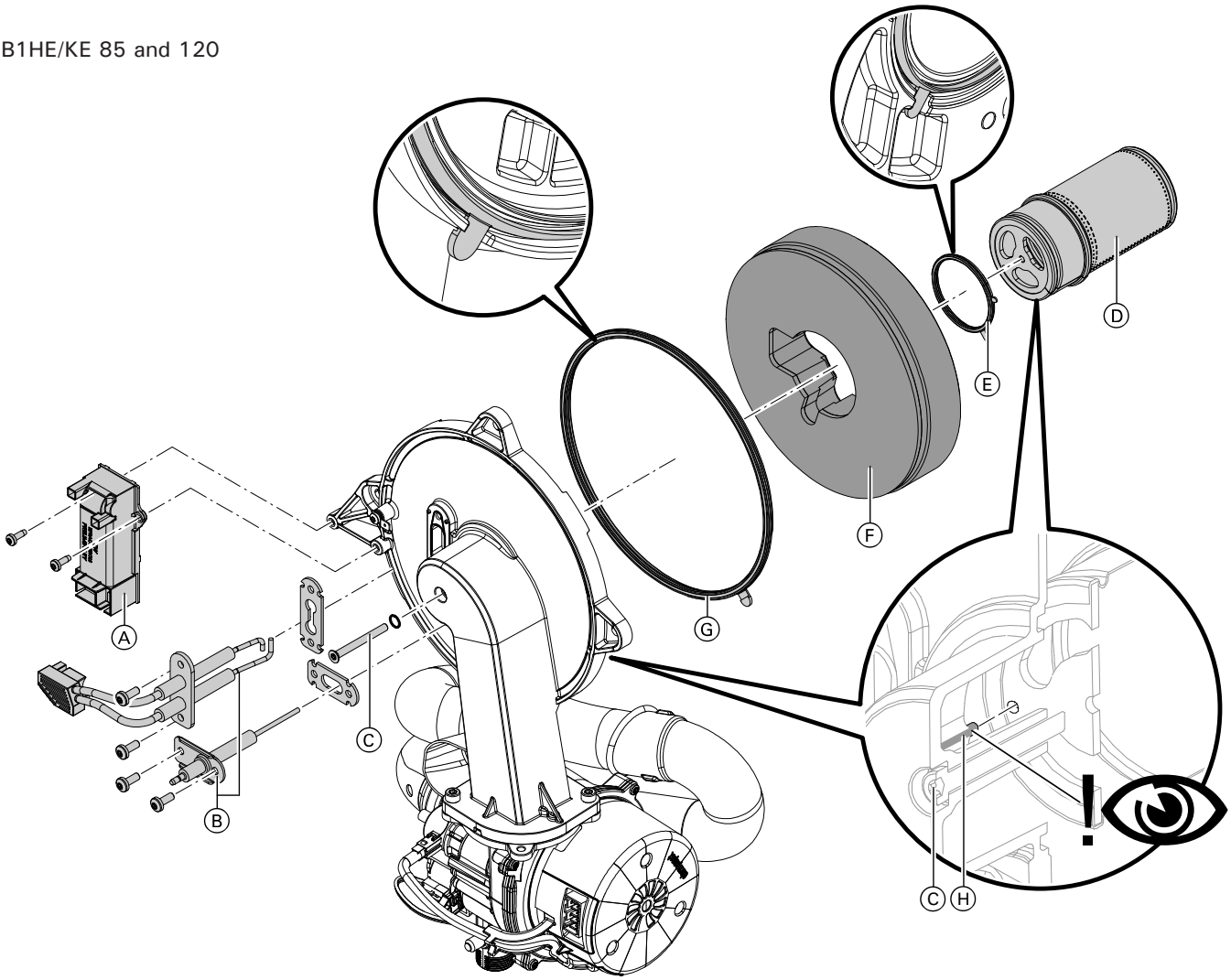

Check flame body assembly Ⓓ, electrodes Ⓑ, thermal insulation ring Ⓕ and gasket Ⓖ for damage. Only remove and replace components if they are damaged or worn.

Note: If replacing the flame body assembly, also replace the flame body assembly gasket and the fixing screw.

1. Disconnect plug with ignition electrode leads from ignition unit Ⓐ.
2. Remove electrodes Ⓑ.
3. Undo Torx screw Ⓒ. Hold onto flame body assembly Ⓓ when undoing the screw.
4. Remove flame body assembly Ⓓ with gasket Ⓔ and thermal insulation ring Ⓕ. Check components for damage.
5. Install new burner gasket Ⓖ. Observe correct installation position. Align the tab as per the diagram.
6. Insert thermal insulation ring Ⓕ and flame body assembly Ⓓ with gasket Ⓔ. Observe correct installation position. Align the tab as per the diagram.
7. Align the hole in flame body assembly Ⓓ with the burner door pin Ⓗ.

IMPORTANT

Incorrect positioning of the flame body assembly Ⓓ on the burner door will cause damage to the burner door. Insert the door pin Ⓗ into the hole in the flame body assembly Ⓓ.

Secure flame body assembly Ⓓ and gasket Ⓔ with Torx screw Ⓒ. Torque: 27 lb.in (3.0 Nm).

8. Check thermal insulation ring Ⓕ for firm seating.
9. Fit electrodes Ⓑ. Check clearances, see following chapter. Torque: 40 lb.in (4.5 Nm).

Checking the Burner Gasket and Flame Body Assembly *(continued)*

B1HE/KE 150 and 199

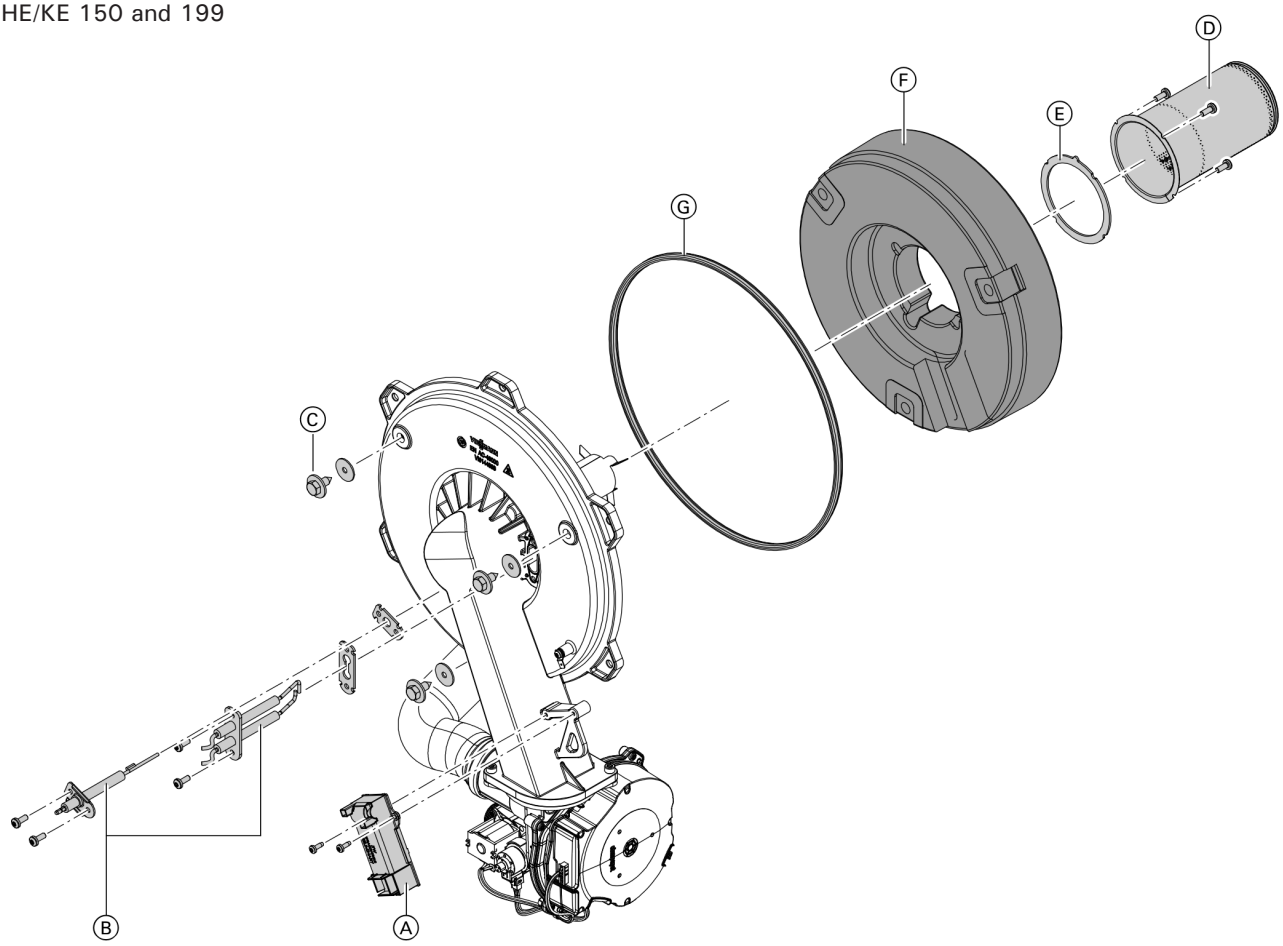

Check flame body assembly Ⓓ, electrodes Ⓑ, thermal insulation ring Ⓕ and gasket Ⓖ for damage. Only remove and replace components if they are damaged or worn.

Note: If replacing the flame body assembly, also replace the flame body assembly gasket and the fixing screws.

1. Disconnect plug with ignition electrode leads from ignition unit Ⓐ.
2. Remove electrodes Ⓑ.
3. Loosen the 3 hex. screws. Hold the insulation ring and then carefully remove it upwards over the flame body.
   If the insulation mats behind the insulation ring are in good condition after removal, it is not necessary to replace them.
4. Loosen the 4 torx screws Ⓒ. Remove any seal residues if necessary. Do not damage the seal seat.
5. Install new flame body Ⓓ with new gasket Ⓔ.
   Torque: 40 lb.in (4.5Nm)
6. Install new burner door gasket Ⓖ.
   Ensure correct alignment!
7. Secure flame body assembly Ⓓ and gasket Ⓔ with 4 Torx screws Ⓒ. Torque: 40 lb.in (4.5 Nm).
8. Place the inner and outer insulation mats in the burner door. Insert thermal insulation ring Ⓕ. Ensure that the outer insulation mat is not under the 3 support points of the retaining clips. Secure the thermal insulation ring with 3 hex head screws Torque: 35 lb.in (4 Nm). Check thermal insulation ring Ⓕ for firm seating.
9. Fit electrodes Ⓑ. Check clearances, see following chapter. Torque: 40 lb.in (4.5 Nm).

Checking and Adjusting the Ignition and Ionization Electrodes

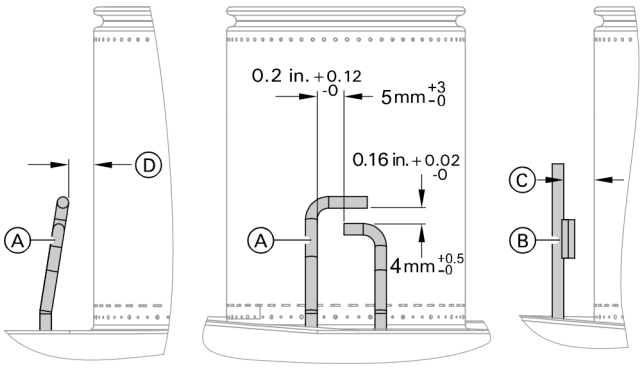

1. Check the electrodes for wear and contamination.
2. Clean the electrodes with a small brush (not a wire brush) or sandpaper.
3. Check the electrode gaps. If the gaps are not as specified or the electrodes are damaged, replace the electrodes and gaskets and adjust them as required. Tighten the electrode fixing screws to a torque of 40 lb.in (4.5 Nm).

Legend

Ⓐ Ignition electrodes
Ⓑ Ionization electrode
Ⓒ Ionization electrode gap:
- B1HE/KE 85/120 [0.40 in. ± 0.02 in. (10 mm ±0.5)]
- B1HE/KE 150/199 [0.47 in. ± 0.02 in. (12 mm ±0.5)]

Ⓓ Ignition electrode gap:
- B1HE/KE 85/120 [0.25 in. ± 0.02 in. (6.5 mm ±0.5)]
- B1HE/KE 150/199 [0.24 in. ± 0.02 in. (6 mm ±0.5)]

Checking the Flue Gas Flapper

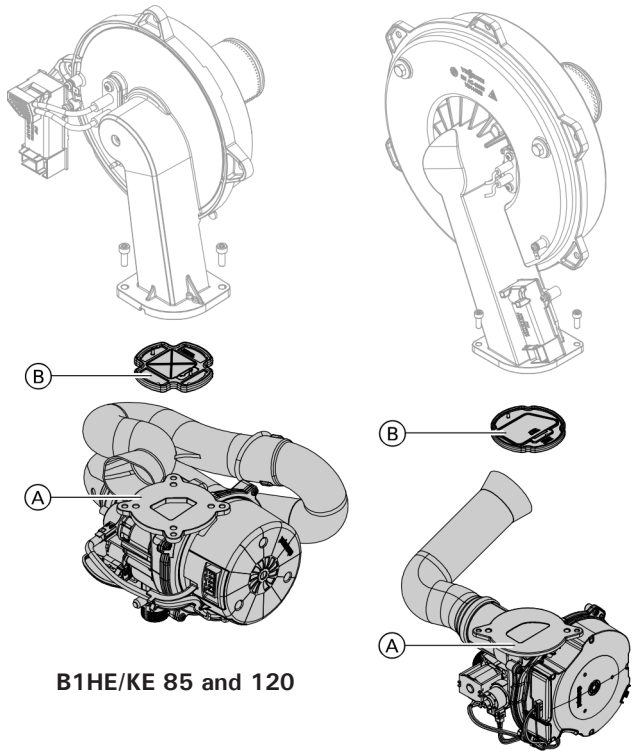

B1HE/KE 85 and 120

B1HE/KE 150 and 199

Back flue gas flapper in the mixing shaft of the burner

1. Undo 2 screws and remove fan Ⓐ.
2. Remove flue gas flapper Ⓑ.
3. Check the damper and gasket for dirt and damage. Replace if necessary.
4. Refit flue gas flapper Ⓑ.
   Note: Observe correct installation position!
5. Refit fan Ⓐ and secure with 2 screws.
   Torque: 35 lb.in (4.0 Nm).

Cleaning the Heating Surfaces

WARNING

Follow cleaning agent manufacturer's safety instructions and wear appropriate protective equipment.

WARNING

Never use a metal wire brush or mechanically driven brushes.

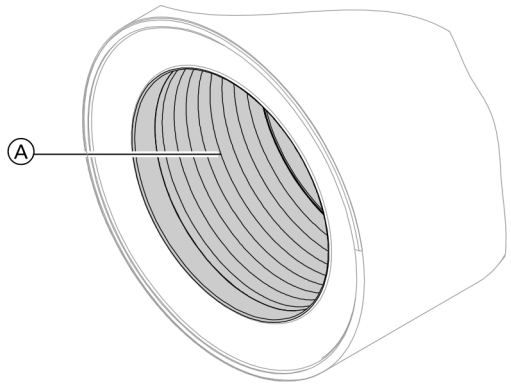

IMPORTANT

Scratches to the surfaces of the heat exchanger that come into contact with hot gas can result in corrosion damage. Brushing can cause deposits to become lodged in the gaps between the coils.

Do not use brushes to clean the heating surfaces.

IMPORTANT

Prevent damage due to cleaning water. Cover electronic components with suitable watertight material.

Note: Discoloration on the heat exchanger surface is a normal sign of use. It has no bearing on the function or service life of the heat exchanger.
The use of chemical cleaning agents is not required.

1. Remove burner assembly and reinstall upon completion of service work as per the instructions on page 50 in this manual.
2. Clean the combustion chamber Ⓐ by vacuuming loose debris out.
3. Remove embedded sediment from the stainless steel heat exchanger surface by thoroughly rinsing with water or cleaning agents such as Axiom Industries "Clean F Steel". Follow Axiom handling and application instructions when using cleaning agent.

   Avoid getting the refractory wet during cleaning.
   Note: Discoloration of the heat exchanger surface is the normal result of the combustion process. It has no impact on the functionality or the longevity of the heat exchanger.
4. If the gaps between the heat exchanger coil windings are plugged, carefully remove debris without scratching the heat exchanger surface using the Viessmann tool specific for this purpose.
   Tool part number 7858492;
   Replacement blade part number 7840346.
5. Flush the combustion chamber Ⓐ with water until it runs clear through the condensate trap.
6. Remove and clean out any accumulated debris from condensate trap. Reinstall condensate trap.
   See page 55 for details.

Check the Condensate Drain / Cleaning the Siphon Trap

IMPORTANT

Prevent damage due to condensate.
Cover electronic components.

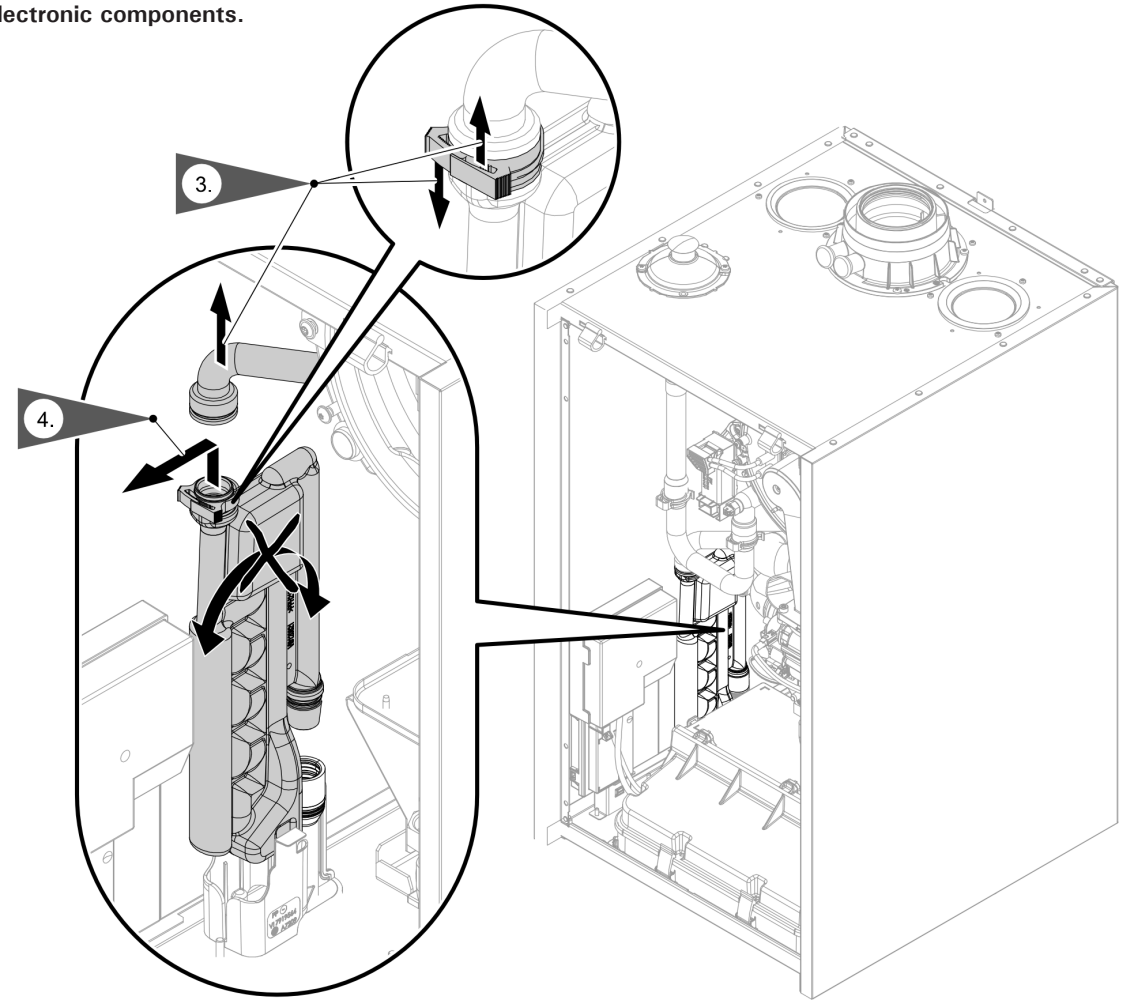

1. Cover electronic components with suitable watertight material.
2. Move the bracket together with the programming unit upwards. See “Moving the programming unit to the maintenance position”.
3. Remove the supply hose.
4. Pull siphon trap upwards out of the drain hose.
5. Hold siphon trap as straight as possible and remove. Ensure that no condensate runs out.
6. Clean the siphon trap.
7. Fill the siphon trap with water and refit it on the drain hose.

IMPORTANT

If the siphon trap is not fitted properly and filled with water, flue gas can escape. Only start the boiler when the siphon trap has been filled. Check that the siphon trap is seated correctly.

8. Refit supply hose, ensure the clip is sealed and securely closed.
9.

WARNING

Risk of electric shock from escaping condensate
Check the connections for leaks and check that the siphon trap is seated correctly.
Before commissioning, remove any condensate that has escaped from the boiler.

Note: Route the drain hose without any bends and with a constant fall.

Installing the Burner

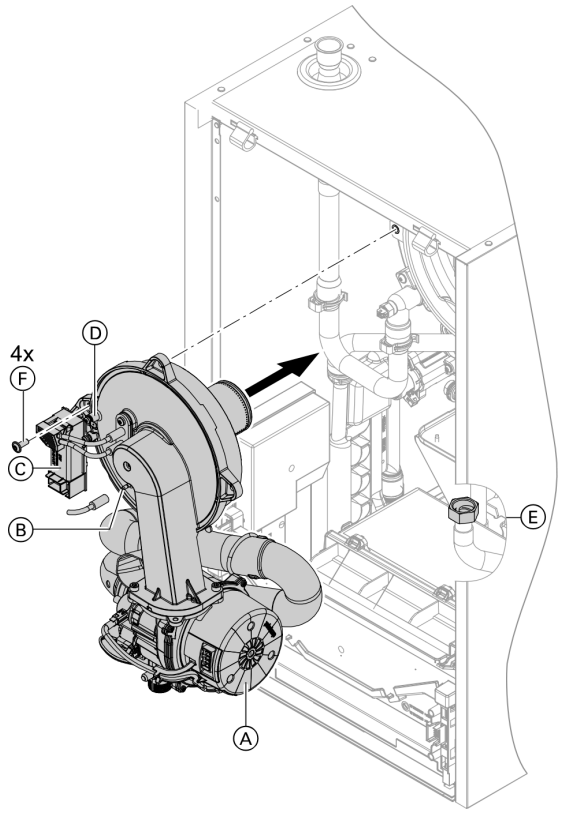

B1HE/KE 85 and 120

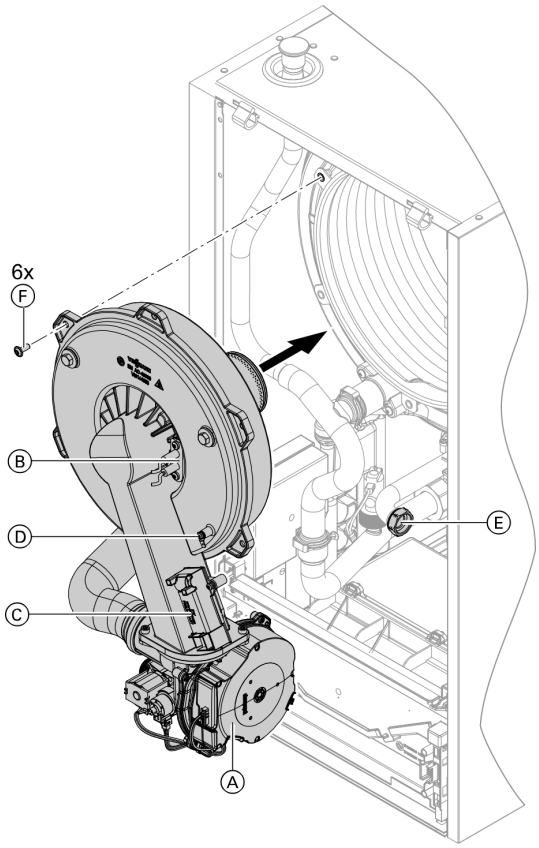

B1HE/KE 150 and 199

1. If necessary, move the programming unit.
2. Insert the burner. Tighten screws (F) diagonally.
   Torque: 35 lb.in (4 Nm).
3. Fit gas supply pipe (E) with a new gasket.
   Torque: 22 lb.ft (30 Nm).

WARNING

Do not damage the gas pipe!
The gas pipe must not come into contact with any other components in the appliance.
Keep the gas pipe from twisting during tightening by using the two wrench system. Do not use pliers!

4. Check the gas connections for leaks.

WARNING

Escaping gas leads to a risk of explosion.
Check all fittings and the gas shut-off valve for gas leaks.

5. Connect the cables/leads:
   - Fan motor (A) (2 plugs)
   - Ionization electrode (B)
   - Ignition unit (C)
   - Ground (D)

Checking the Neutralizing System (if installed)

Checking the Flow Limiter (only for gas condensing combi boiler)

B1KE 120

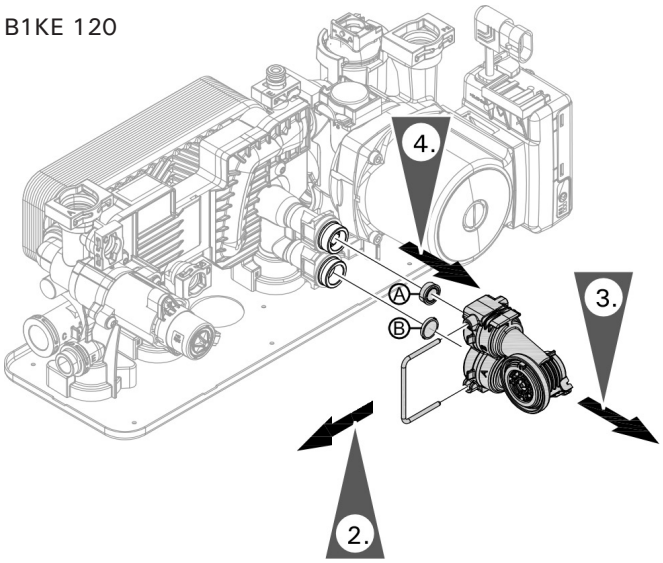

1. Remove the control unit.
   Remove the burner.
   Drain the boiler on the DHW side.
2. ■ Remove the spring clip.
   ■ On a B1KE-199 boiler, undo the G 3/4" union nut at the cold water inlet and the union nut on the upper side of the flow sensor. Pull the pipe out.
3. Remove the DHW flow sensor.
4. Check flow limiter Ⓐ and filter sieve Ⓑ. Replace in case of excessive scaling or damage. Reinsert.
5. Install the DHW flow sensor with new gaskets in the reverse order 18 lb.ft (24 Nm) torque for the union nuts.

WARNING

Risk of electric shock from escaping heating water or DHW.
Check all water side connections for tightness.

B1KE 199

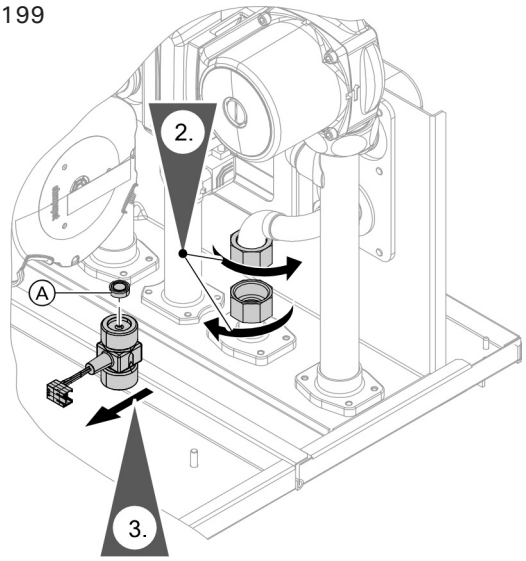

Flow limiter

Output	Flow rate	Color
B1KE 120	3.7 GPM 14 **L/min**	pink
B1KE 199	5.3 GPM 20 **L/min**	green

Checking the Expansion Tank (on site) and System Pressure

Perform check with the system cold.

1. Drain boiler/system and reduce pressure until the manometer reading is “0”.
2. If the nitrogen pressure of the precharged expansion tank is less than the static pressure of the system, inflate membrane pressure to slightly exceed pressure of system.
   The static pressure required at the tank is based upon the static height of the system. The system fill pressure value must be equal to the expansion tank pressure value at approximately 60ºF (15.6ºC).
   Note: Static head of 33 ft. (10 m) (distance between boiler and topmost heat emitter surface) corresponds to a static pressure of 0.8 bar (12 psig).
3. Top up with water until filling pressure is higher than the inlet pressure of the diaphragm expansion tank.
   Note: With the system cold, the filling pressure must be approximately 3 psig higher than the static pressure.
   B1HE/KE 85/120
   Maximum operating pressure: .....45 psig
   Minimum operating pressure: .....12 psig
   B1HE/KE 150/199
   Maximum operating pressure: .....60 psig
   Minimum operating pressure: .....12 psig
4. When starting up the system for the first time, mark this value as the minimum filling pressure on the pressure gauge.
   Note: A lower pressure gauge reading usually indicates loss of water due to leakage. All leaks must be repaired.

Checking the Safety Valve Function

Ensure proper operation of low water cut-off(s) (if applicable), pressure relief valve, and pump(s).

Check pressure gauge, air vent and pressure relief valve. Ensure that pressure relief valve does not leak and that it operates in accordance with information provided by the original manufacturer.

Refer to maintenance instructions supplied with low water cut-offs, pumps, etc.

Flush float water type low water cut-offs (if used).

Follow local regulations with respect to backflow preventers.

If oil-lubricated pumps are used, ensure proper lubrication.

If motorized zone valves are used, refer to maintenance instructions provided with zone valves.

Checking All Gas Equipment for Leaks at Operating Pressure

WARNING

The gas supply piping must be leak tested before placing the boiler in operation.

CAUTION

Ensure all joints of gas line are pressure tight and that gas valves do not leak when under normal operating pressure (use approved leak detection liquid). Do not use open flame.

Fitting the Front Panel

See page 30.

Checking the Combustion Quality

The Vitodens 100-W is factory set for operation with natural gas.

The electronic combustion controller automatically ensures optimum combustion quality.

During commissioning/maintenance, only the combustion values need to be checked. To do this, test the CO content and CO_2 or O_2 content, and record these in the report on page 99.

Note: To prevent operating faults and damage, operate the boiler with uncontaminated combustion air.

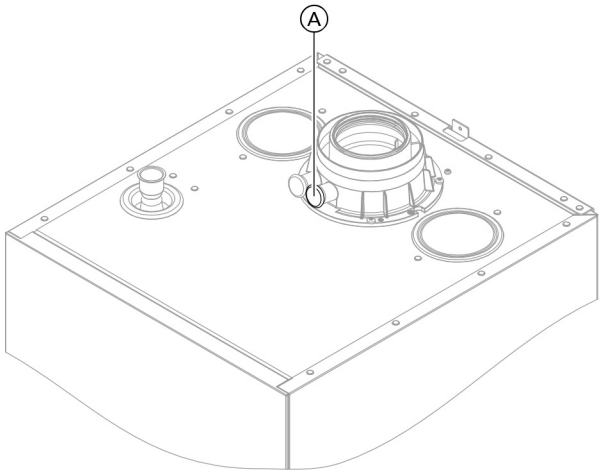

Permissible CO_2 or O_2 content
Operation with natural gas
- CO_2 content: 6.9 - 11%
- O_2 content: 2.1 - 8.4%

Operation with LPG
- CO_2 content: 8.3 - 12.4%
- O_2 content: 2.1 - 8.4%

The CO emmissions shall not exceed 400 ppm within the specified range.

If the actual CO_2 or O_2 values are outside their respective ranges, proceed as follows:
- Check the flue system for leaks; see page 49.
- Check the ionization electrode and connecting cable; see page 51.

Note: During commissioning, the combustion controller carries out an automatic calibration. Allow approx. 50 sec after the burner has started before testing the emissions.

1. Connect a flue gas analyzer at flue gas port Ⓐ on the boiler flue connection.
2. Open the gas shut-off valve. Start the boiler. Create a call for heat.
3. Set the lower heating output. See the following chapter.
4. Check the CO_2 content. If the actual value deviates from the permissible ranges, implement steps listed above.
5. Enter the value into the report.
6. Set the upper heating output. See the following chapter.
7. Check the CO_2 content. If the actual value deviates from the permissible ranges by more than 1%, implement steps listed above.
8. Enter the value into the report.
9. Re-seal test port Ⓐ.

⚠ WARNING

Escaping flue gas can damage your health.
Check test port Ⓐ for leaks.

IMPORTANT

A CO_2 measurement (see page 60) must be taken before and after working on gas boilers to eliminate health risks and to guarantee the satisfactory condition of the system.

Record the measured combustion values in the sequence stated in the Maintenance Record on page 99 in this manual.

Checking the CO_2 Content / Relay Tests

Setting the upper/lower heating output

Note: Ensure adequate heat transfer.

Tap the following buttons:

1. ≡ and OK simultaneously for approx. 4 sec, then release.
2. Use ∧∨ to select "Actuator test".
3. OK
4. Use ∧∨ to select the "Boiler" group.
5. OK
6. Use ∧∨ to select "Burner mod. set value".
7. OK
8. Set the lower heating output:
   Select "Minimum heating output".
   Confirm with "OK".
   The burner now operates at the lower heating output.
9. Set the upper heating output:
   Select "Maximum heating output".
   Confirm with "OK".
   The burner now operates at the upper heating output.

The control unit must be matched to the system equipment level.

Clock Natural Gas Meter

Clock natural gas meter to verify input

1. Ensure all other gas equipment served by the meter is turned off during timing of gas input to the Vitodens 100-W boiler.
2. Measure the time in seconds it takes for the boiler to use 10 cu. ft. of gas. Divide 3600 x 10 by the number of seconds and you get the number of cu. ft. of gas used per hour. Multiply this number by the heating value of the gas to obtain Btu per hour input.

⚠ CAUTION

Always contact your gas utility to obtain the correct heating value before clocking the meter.

IMPORTANT

A boiler under fired by 5% is still acceptable.
Do not over fire the boiler.

For example:
A Vitodens 100-W 150 boiler (150 000 Btu/h input) requires 240 seconds to use 10 cu. ft. of natural gas. After contacting the local utility, you find the heating value is e.g.
1000 Btu per cu. ft.
Therefore,
((3600 x 10)/240) x 1000 ≅ 150 000 Btu/h input.
Therefore, the boiler input is correct.
Burner input formulas:
INPUT = (3600 + t) x 1000 where
t = TIME (sec.) for 1 ft.3
INPUT = (3600 x .01 x 1000 x 35.31) + T where
T = TIME (sec.) for .01 m3 natural gas

Calling Up and Resetting the Maintenance Display

Checking service messages

1. ≡
2. Use ∧∨ to select "Active messages".
3. OK
4. Use ∧∨ to select "Maintenance".
5. OK
   Existing messages are displayed.

Reset maintenance (after maintenance has been carried out)

1. ≡ and OK simultaneously for approx. 4 sec, then release.
2. Use ∧∨ to select "Reset service messages".
3. OK

Instructing the System User

The system manufacturer must provide the operator of the system with the operating instructions and instruct the operator in the system operation.
This also includes all components added as accessories, e.g. remote controls. The system installer should also provide information on the required maintenance.

DHW hygiene

For optimum DHW hygiene, avoid DHW temperatures that are < 122°F (50°C). For larger systems and systems with low water exchange, the temperature should not drop below < 140°F (60°C).

Hygiene function (B1HE only)

The DHW can be heated to a specified (higher) target DHW temperature for a period of one hour.
To activate the function, see the operating instructions.
Inform the system user what DHW temperatures should be set and the risks associated with having a raised outlet temperature at the draw-off points.

Calling Up Parameters

Note: All parameters are accessible via a software tool, such as the “Vitoguide mobile” app.

- Parameters are split into the following groups:
  - “General”
  - “Boiler”
  - “DHW”

Note: The display and setting of some parameters is dependent on:
- Boiler

Tap the following buttons:

1. ≡ and OK simultaneously for approx. 4 sec, then release.
2. Use ∧∨ to select “System configuration”.
3. OK
4. Use ∧∨ to select the required group.
5. OK
6. Use ∧∨ to select the parameter for adjustment. See tables below.
7. OK
8. ∧∨ for the required value.
9. OK

General

Note: Parameter values in bold are factory settings.

508.0 “UTC time zone”

Setting		Explanations
	2 −24 to +24	Setting of the UTC time zone in which the boiler is located. The factory setting is UTC +1 h Time difference adjustable from −12 h to +12 h in increments of 0.5 h

896.0 “Display correction for outside temperature”

Setting		Explanations
	0 -10 to + 10	Correction of measured outside temperature Correction in the factory setting 0 K (0°F) Correction adjustable from -10 to + 10 K in 1 K increments (-18°F to +10°F in 1.8°F increments)

912.0 "Automatic summer/wintertime changeover"

Setting		Explanations
No Yes	0 **1**	Automatic changeover switched off Automatic changeover switched on

912.1 “Earliest day of changeover from winter to summertime”

Setting		Explanations
	25 1 to 31	Changeover from 02:00 h to 03:00 h occurs on the Sunday after or on this set date. Day of changeover adjustable from 1st to 31st of the month

912.2 “Month of changeover from winter to summertime”

Setting		Explanations
	3 1 to 12	Month of changeover: March Month of changeover adjustable from January to December

912.3 “Earliest day of changeover from summer to wintertime”

Setting		Explanations
	25 1 to 31	Changeover from 03:00 h to 02:00 h occurs on the Sunday after or on this set date. Day of changeover adjustable from 1st to 31st of the month

912.4 “Month of changeover from summer to wintertime”

Setting		Explanations
	10 1 to 12	Month of changeover: October Month of changeover adjustable from January to December

1098.4 “Gas volume correction factor”

Setting		Explanations
	1,0000 .7000 to 1.0000	Value is provided on the gas supplier’s bill. Used for gas consumption data. Calorific value adjustable from 0.7000 to 1.0000 in increments of 0.0001.

General *(continued)*

Note: Parameter values in bold are factory settings.

1098.5 “Calorific value”

Setting		Explanations
	10.0000 5.0000 to 40.0000	Value is provided on the gas supplier’s bill. Used for gas consumption data. Calorific value adjustable from 5.0000 to 40.0000 kWh/m³ in increments of 0.0001. If you don’t have a supplier’s bill - Conversion factor: 1kWh/m³ = 96.6 BTU/ft³ - Typical calorific value for Natural Gas is 1000 BTU/ft³ = 10.4 kWh/m³ - Typical calorific value for Liquid Propane Gas is 2500 BTU/ft³ = 25.9 kWh/m³

1504.0 “Source for date and time”

Setting		Explanations
Local	**0** 1	Selection of source for date and time The setting depends on the boiler and accessories. Factory setting: The date and time are adopted from the control unit. Internet protocol (see parameter “508.0”)

2241.0 “Source outside temperature sensor “

Setting		Explanations
	1	Hardwired

Boiler

521.0 "Interval in burner hours run until next maintenance"

Setting		Explanations
	0 0 to 25500	Number of burner hours to run until next service Burner hours until next service adjustable from 0 to 25500

522.3 “Interval until next maintenance”

Setting		Explanations
	0 1 2 3 4 5	Interval until next maintenance No interval selected 3 months 6 months 12 months 18 months 24 months

596.0 “Maximum heating output”

Setting		Explanations
	100 0 to 100	A limit can be set on the maximum heating output for heating operation. Heating output in the factory setting 100% Adjustable from 0 to 100%

597.0 “Limit, max. heating output for DHW heating”

Setting		Explanations
	100 0 to 100	A limit can be set on the maximum heating output for DHW heating. Heating output in the factory setting 100% Adjustable from 0 to 100%

Boiler *(continued)*

Note: Parameter values in bold are factory settings.

1100.2 "Set speed of the primary circuit pump in heating mode"

Setting		Explanations
	...	Target speed of internal circulation pump ■ In heating operation ■ With external demand ■ With demand in conjunction with a low loss header Factory settings defined by settings specific to the boiler The setting range depends on the boiler

1240.0 "Operating mode of primary circuit pump" (not for weather-compensated operation)

Setting		Explanations
	1	"Automatic" Switched on regardless of current temperature level
	2	Modulating in line with the modulation level of the boiler. Boiler-specific min. and max. pump speeds are observed.
	7	Shutdown in reduced mode (in conjunction with constant operation or when no demand via room thermostat)

1411.0 "Clear maintenance messages"

Setting		Explanations
		Clear maintenance messages once maintenance has been performed.
No	**0**	Maintenance messages are active (if present).
Yes	1	Clear maintenance messages once.

1503.0 "Minimum heating output"

Setting		Explanations
	... 5 to 100	A limit can be set on the minimum heating output for heating operation. Factory settings defined by settings specific to the boiler Adjustable from 5 to 100%

1606.0 "Minimum burner pause time"

Setting		Explanations
		The minimum burner pause time can be set subject to boiler load.
	0	Fixed setting for minimum burner pause time
	1	Factory setting, integral method (see parameter 1606.4)

1606.4 "Integral threshold for burner switch-off"

Setting		Explanations
	50 5 to 255	Only effective if parameter 1606.0 has been set to 1. Factory setting 50 K x min (90°F x min) Adjustable from 5 to 255 K x min (9 to 459°F x min) The integral control mode allows for the adjustment of the supply water temperature dead band (supply temperature overshoot and undershoot) to extend burner cycle times and help minimize burner short cycling in low heat demand applications. The greater the setting the wider the dead band, the smaller the setting the tighter the dead band.

DHW

Note: Parameter values in bold are factory settings.

396.0 "Target DHW temperature"

Setting		Explanations
		Factory setting depends on boiler

497.0 "Operating mode of DHW recirculation pump"

Setting		Explanations
	0 4	DHW recirculation pump: Time program Selected cycle (see parameter 497.3)

497.1 "DHW recirculation pump for hygiene function"

Setting		Explanations
Off On	**0** 1	DHW recirculation pump: In accordance with the selected time program Switched on during hygiene function and after time program **WARNING** **Risk of injury due to increased DHW temperature. Inform the system user of the risk from the raised outlet temperature at the draw-off points.**

497.2 "DHW recirculation pump for DHW heating"

Setting		Explanations
Off On	**0** 1	DHW recirculation pump: In accordance with the selected time program Switched on during DHW heating

497.3 "Number of cycles DHW recirculation pump"

Setting		Explanations
	0 1 2 3 4 **5**	Number of cycles per hour for 5 minutes each during the selected time phase: 1 cycle 2 cycles 3 cycles 4 cycles 5 cycles 6 cycles

503.0 "Scald protection"

Setting		Explanations
Off	0	The adjustable water temperature is limited to a maximum value. Scald protection switched off
On	**1**	⚠ **Risk of injury due to increased DHW temperature Inform the system user of the risk from the raised outlet temperature at the draw-off points.** Scald protection switched on (maximum DHW temperature 140°F (60°C) **Note:** Even with the scald protection switched on, higher outlet temperatures may occur at the draw-off points in the following cases: ■ With active hygiene function ■ While the boiler is being calibrated

DHW *(continued)*

534.0 “Circulation pump run-on”

Setting		Explanations
120 s	**120** 0 to 900	Circulation pump run-on after storage tank heating Factory setting 120 sec run-on Run-on time adjustable from 0 to 900 sec in 60 sec increments (the run-on time is rounded down to full minutes) **Note:** To avoid damaging the boiler, do not set the run on time to < 120 sec.

1085.0 “Tank heating: Start point target”

Setting		Explanations
	25 10 to 100	Start point for DHW heating below target DHW temperature Factory-set start point 2.5 K (5°F) below target DHW temperature Adjustable start points: 10: 1.0 K (1.8°F)... 100: 10.0 K (18°F) **Note:** Parameter not valid for a DHW tank with temperature switch! Irrespective of this, the stop point is 2.5 K (5°F) above the target DHW temperature.

1087.0 “Max. duration, DHW heating”

Setting		Explanations
	60 0 1 to 240	After a set period of time has elapsed, DHW heating ends even though the target DHW temperature has not yet been reached. Not adjustable on gas condensing combi boilers Factory setting 60 min No time limit for DHW heating Duration of DHW heating adjustable from 1 to 240 min in 1 min increments

1087.1 “Min. delay until next time DHW is heated”

Setting		Explanations
	60 60 to 240	Minimum delay before DHW heating starts again after the maximum duration from 1087.0 has been exceeded, even though there is a demand. Not adjustable on gas condensing combi boilers Factory setting, delay of 60 min Delay adjustable from 60 to 240 min in 1 min increments

1101.2 “Set speed of the primary circuit pump for DHW heating”

Setting		Explanations
	...	Target speed of the internal circulation pump when operated as a DHW pump Factory settings defined by settings specific to the boiler The setting range depends on the boiler

Service Menu

Calling up the service menu
Tap the following buttons:

1. ≡ and OK simultaneously for approx. 4 sec, then release.
2. Select the required menu section.
   Note: Not all menu areas will be available, depending on the system equipment level.
   Note: The boiler automatically switches on the WiFi access point. Further commissioning steps according to the instructions in the software tool used (e.g. "Vitoguide mobile" app)
   Note: Tap " ≡ " to return to the "main service menu"

Service menu overview

Service	
Active messages	
Reset maintenance	
Connect with software tool	
Diagnostics	
Actuator test	
System configuration	
Message history	
Emissions test mode	
High limit safety cut-out test	
Basic settings	
	Factory settings
	Commissioning assistant
Exit demo mode	

Leaving the service menu
Tap the following buttons:

" ≡ " for 4 sec.
Note: The system exits the service menu automatically after 30 min.

Diagnostics
Checking operating data
Operating data can be checked in various areas.
See "Diagnostics" in the service menu overview.
Operating data on heating circuits with mixing valve can only be called up if such components are installed in the system.
Note: If a called up sensor is faulty, "- - -" appears on the display.

Calling up operating data
Tap the following buttons:

1. ≡ and OK simultaneously for approx. 4 sec, then release.
2. Use ∧∨ to select "Diagnostics".
3. OK
4. Use ∧∨ to select the required group.
5. OK
6. Use ∧∨ to select the required information.

Checking Outputs (actuator test)

Note: When the actuator test is started, all actuators are initially disabled and valves moved to their central position.
Tap the following buttons:

1. ≡ and OK simultaneously for approx. 4 sec, then release.
2. "Actuator test"
3. OK
4. OK to confirm the prompt.
5. Use ∧∨ to select the required group.
6. OK
7. Use ∧∨ to select the actuator.
   See the table below.
8. OK
9. ∧∨ for the required value.
10. OK
    Note: The function is active for 30 min.
11. Use ≡ to end the Actuator test.

Checking Outputs (actuator test) *(continued)*

The following actuator functions can be controlled subject to the system and boiler equipment level:

Display		Explanation
Boiler group		
Fan speed	Target value	Burner fan speed in rpm (rotations/minute)
Burner modulation, target value	■ Off	Modulation level (in accordance with specific boiler settings)
	■ Minimum heating output	
	■ Maximum heating output	
	■ Maximum DHW output	
3-way valve target position	Heating	3-way diverter valve set to heating operation
	Middle	3-way diverter valve in central position (filling/draining)
	DHW	3-way diverter valve set to DHW heating
Heating group		
Primary circuit pump speed	Target value	Internal circulation pump speed in %
3-way valve target position	Heating	3-way diverter valve set to heating operation
	Middle	3-way diverter valve in central position (filling/draining)
	DHW	3-way diverter valve set to DHW heating
Heating circuit 1 pump speed	Target value	Speed, heating circuit pump, heating circuit 1 without mixing valve in %
DHW group (domestic hot water)		
Primary circuit pump, target speed	Target value	Internal circulation pump in %
3-way valve target position	Heating	3-way diverter valve set to heating operation
	Middle	3-way diverter valve in central position (filling/draining)
	DHW	3-way diverter valve set to DHW heating
Tank loading pump	On	
	Off	
DHW recirculation pump	On	
	Off	
Transfer pump hygiene function	On	
	Off	
DHW pump	On	
	Off	

Fault Display on the Programming Unit

If there is a fault, the display shows “Burner fault” or “Active messages”.
Note: If a central fault message facility is connected, this is started.
If “Connection error” appears on the display:
Check connecting cable and plug between HMU heat management unit and HMI programming unit.

Calling up fault messages
Tap the following buttons:

1. “ ≡ “
2. ∧∨ for:
- “Details”, if burner faults are present.
- “Active messages”, if further faults are present.

3. OK
4. ∧∨ for “Fault” to display all fault messages.
5. OK
6. ∧∨ for the required message
   For an explanation of the fault codes, see the following table.
7. OK
8. “ ≡ “ for “Fault”
9. ∧∨ to call up further messages

Acknowledge fault display

1. “ ≡ “
2. ∧∨ for “Active message”
3. OK
4. ∧∨ for “Fault” to display all fault messages.
5. OK
6. ∧∨ for “Acknowledge” to acknowledge all fault messages.
   Note: Service messages are also acknowledged.
   Note: Any connected central fault message facility stops. If an acknowledged fault is not remedied, the fault message will be redisplayed the following day at 07:00, and the fault message facility restarts.

Calling up acknowledged fault messages
Tap the following buttons:

1. “ ≡ “
2. ∧∨ for “Active messages”.
3. OK
4. ∧∨ for “Fault”
5. OK
   Note: When troubleshooting, always observe the subscriber number of the component.
   Check the component displayed. Remedy fault if applicable.

To identify the affected module, check the position of rotary switch S1 on the module if necessary.
The following is displayed:
- Date and time of the occurrence of the fault
- Fault code
- Description of the fault
- Subscriber number of the component on which the fault has occurred:
  CAN BUS subscriber components
  1 HMU heat management unit
  50 BCU burner control unit
  58 Communication module (TCU 200)
  59 HMI programming unit
  60 Fan unit

Calling up fault messages from the fault memory (message history)
The 10 most recent faults (including those remedied) and service messages are saved and can be called up.
Faults are sorted by date.
Tap the following buttons:

1. ≡ and OK simultaneously for approx. 4 sec, then release.
2. ∧∨ for “Message history”
3. OK
4. Use ∧∨ to select the required category.
   - “Faults” to call up saved fault messages.
   - “Service messages” to call up saved service messages.
   - “Status”, to call up the saved status messages.
   - “Warnings” to call up saved warning messages.
   - “Information”, to call up saved service information.

   For messages, see chapter “Further messages”, page 70.
5. OK
6. ∧∨ for the required message
7. OK

Delete message list

1. ≡ and OK simultaneously for approx. 4 sec, then release.
2. “Message history”
3. OK
4. Use ∧∨ to select “Delete message list”.
5. OK
6. OK to confirm the prompt.

Fault Display on the Programming Unit *(continued)*

Further messages

Service messages

Message on the display	Meaning
P.1	Interval until the next service.
P.4	Top up heating water.
P.8	Service due after burner hours run.

Status messages

Message on the display	Meaning
S.60	Summer mode active (outside temperature economy function)
S.74	Heating suppression, heating
S.75	DHW recirculation pump active
S.154-1	Boiler internal flowswitch is in the open position

Warning messages

Messages on the display	Meaning	Measure
A.12	Real time clock battery flat.	Replace the battery (type CR2032) in the HMU heat management unit.
A.18	Possible condensate backup in the heat cell	Check combustion chamber and condensate drain. Condensate may escape when removing the burner door. Take appropriate precautions to protect the electronic components. If condensate is backed up into the combustion chamber, replace the insulating ring, insulating block, flame body, insulating mats and ionization electrode. If the condensate has reached the flame body assembly, also replace the gasket of the flame body assembly.
A.19	Temperature limiter has responded	
A.20	Service interval could not be activated.	Check the time and date settings.

Information

Messages on the display	Meaning
I.56	External demand active
I.57	External blocking active
I.59	Parameters were restored (parameter set was flashed to BCU electronics module).

Overview of Electronics Modules

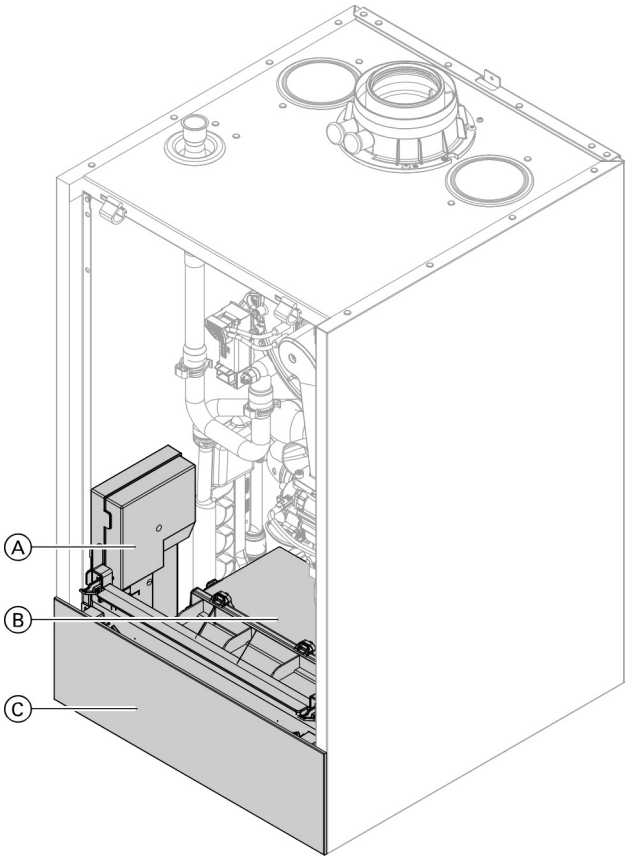

Legend

Ⓐ BCU burner control unit
Ⓑ HMU heat management unit with wiring panel
Ⓒ HMI programming unit with WiFi communication module

Fault Messages

Note: For diagnostics and troubleshooting, see chapter "Repairs".
Fault messages dependent on boiler equipment level

Displayed fault code	System characteristics	Cause	Measures
F.5	System continues operating in normal mode with replacement value.	Lead break or short circuit	Check plug 33/X6 and cable: ■ Check voltage level, to see if 5V present at plug 33, pin 1 and 2. ■ Turn the gas condensing system boiler ON/OFF switch off and back on again.
F.7	No DHW heating	Lead break, storage tank temperature sensor	■ Check DHW setting in the commissioning assistant and correct if necessary. ■ Check storage tank temperature sensor (plug 5, wires 3 and 4). ■ Measure voltage at sensor input on electronics module. Target value: 3.3V– with sensor disconnected. Replace faulty component if necessary.
F.8	No DHW heating	Short circuit, storage tank temperature sensor	Check storage tank temperature sensor (plug 5, wires 3 and 4). Replace faulty component if necessary.
F.13	Regulates as if the outside temperature were 32°F (0°C).	Lead break, outside temperature sensor	■ Check the operating mode setting in the commissioning assistant and correct if necessary. ■ Check outside temperature sensor and connection to sensor (external plug, contacts 1 and 2). ■ Measure voltage at sensor input on electronics module. Target value: 3.3V– with sensor disconnected. Replace faulty component if necessary.
F.14	Regulates as if the outside temperature were 32°F (0°C).	Short circuit, outside temperature sensor	Check outside temperature sensor and connection to sensor (external plug, and contacts 1 and 2). Replace faulty components if necessary.
F.49	Burner in a fault state	Flue gas temperature sensor disconnection	Check flue gas temperature sensor. Reset the boiler.
F.50	Burner in a fault state	Short circuit, flue gas temperature sensor	Check flue gas temperature sensor. Reset the boiler.
F.59	Burner locked out	Power supply, low voltage	Check mains voltage. If voltage is correct and the fault occurs repeatedly, replace the fan unit.

Fault Messages *(continued)*

Displayed fault code	System characteristics	Cause	Measures
F.62	Burner in a fault state	High limit safety cut-out has responded.	■ Check heating system fill level. ■ Check pre-charge pressure in diaphragm expansion tank. Adjust to required system pressure. ■ Check whether flow rate is sufficient (flow sensor and circulation pump). ■ Check 3-way diverter valve function in actuator test. Vent the system. Reset the boiler.
F.63	Burner in a fault state	Flue gas temperature limiter has responded.	■ Check heating system fill level. ■ Check pre-charge pressure in diaphragm expansion tank. Adjust to required system pressure. ■ Check whether flow rate is sufficient (flow sensor and circulation pump). ■ Check 3-way diverter valve function in actuator test. Vent the system. Reset the boiler once the flue system has cooled down.
F.67	Burner in a fault state	Ionization current lies outside the permissible range	Check gas supply (gas pressure), check gas solenoid valve and inlet strainer. Check ionization electrode: ■ Clearance to flame body assembly. ■ Check electrode/flame body assembly for contamination. If specified measures don't help, replace fan unit. Reset the boiler.
F.68	Burner in a fault state	Flame signal is already present at burner start.	Close the gas shut-off valve. Remove connecting cable of the ionization electrode. Reset the boiler. If the fault persists, replace BCU burner control unit: See page 89.
F.69	Burner in a fault state	Ionization current lies outside the permissible range	Check ionization electrode: ■ Check whether insulation block is touching electrode ceramic. ■ Check gas solenoid valve: Activate "Minimum heating output" for approx. 4 min in actuator test. If this causes a fault to occur, replace BCU burner control unit. ■ In the actuator test, switch from "Minimum heating output" to "Maximum heating output". If this fault occurs during modulation, check the intake screen for contamination. Replace the fan unit if necessary.

Fault Messages *(continued)*

Displayed fault code	System characteristics	Cause	Measures
F.70	Burner in a fault state	Internal error burner control unit	Replace BCU burner control unit: See page 89.
F.71	Burner in a fault state	Fan speed too low	■ Check fan for blockage. ■ Check the gas type and flue system setting in the commissioning assistant and correct if necessary. Reset the boiler.
F.72	Burner in a fault state	Fan idle state not reached	Reset the boiler. If fault occurs repeatedly, replace fan unit.
F.73	Burner in a fault state	Internal communication error	Reset the boiler. If fault recurs, replace BCU burner control unit: See page 89.
F.74	Burner locked out. Internal circulation pump off. No central heating and no DHW heating.	Water pressure too low	Top up with water. Vent the system. If the fault occurs repeatedly: ■ Check system pressure sensor with external manometer. ■ Check diaphragm expansion tank pre-charge pressure. ■ Check settings for target system pressure and range.
F.77	Burner in a fault state	Data memory burner control unit	Reset the boiler. If fault recurs, replace BCU burner control unit: See page 89.
F.89	No central heating and no DHW heating	Internal circulation pump blocked	Check circulation pump. Replace if necessary.
F.142	Burner in a fault state	Communication error CAN bus	■ Check the fan unit for correct function. For this, check the stepper motor of the fan unit (reference run with mains ON). ■ If the fault still persists, visually check the plug-in connections and cables of the CAN bus. ■ Check further CAN bus subscribers. If fault still persists, replace the fan unit.
F.160	Burner in a fault state	Communication error CAN bus	■ If “Connection error” is displayed, check the internal CAN bus subscriber connections. ■ If only F.160 is displayed, check the connections of the external CAN bus subscribers. ■ Check the connecting cables for firm seating and corrosion. Reset the boiler.
F.161	Burner in a fault state	BCU data memory access error	Reset the boiler. If fault recurs, replace BCU burner control unit: See page 89.
F.163	Burner in a fault state	Memory access checksum error BCU	Reset the boiler. If fault recurs, replace BCU burner control unit: See page 89.

Fault Messages *(continued)*

Displayed fault code	System characteristics	Cause	Measures
F.182	No DHW heating	Short circuit, outlet temperature sensor (if installed)	Check outlet temperature sensor (plug X1, cores 13 and 14). Measure sensor input on electronics module. Target value: 3.3V– with sensor disconnected
F.183	No DHW heating	Lead break, outlet temperature sensor (if installed)	Check outlet temperature sensor (plug X1, cores 13 and 14).
F.184	Burner in a fault state	Short circuit, common supply temperature sensor/ high limit safety cutout	Check the supply temperature sensor/high limit safety cut-out. Check sensor lead. Replace faulty component if necessary. Reset the boiler.
F.185	Burner in a fault state	Lead break, common supply temperature sensor/high limit safety cut-out	Check the supply temperature sensor/high limit safety cut-out. Replace faulty component if necessary. Reset the boiler.
F.299	Time/date incorrect	Real time clock setting incorrect	Set the time and date.
F.342	No central heating, no DHW heating	Communication error, BCU burner control unit	■ Check connecting cable to the burner control unit plug X4 on BCU. ■ Check all plug-in connections and cables of the internal CAN. ■ Remove all plugs except X4, X2, X16 and X18 from the BCU burner control unit. Check whether fault persists. **Note:** Several other fault messages will be added due to the removed plugs. Ignore these. If fault message F.342 is no longer shown, reinsert the plugs one by one and establish which component is faulty. Reset the boiler.
F.345	Burner locked out, automatic enabling after boiler cool down. Independent restart.	Temperature limiter has responded. See boiler specification.	■ Ensure adequate heat transfer. ■ Check heating system fill level. ■ Check pre-charge pressure in diaphragm expansion tank. Adjust to required system pressure. ■ Check whether flow rate is sufficient (flow sensor and pump). ■ Check 3-way diverter valve function in actuator test. Vent the system. If the fault occurs during DHW heating: Check DHW tank or plate heat exchanger for contamination and scaling.

Fault Messages *(continued)*

Displayed fault code	System characteristics	Cause	Measures
F.346	Burner in a fault state	Ionization current calibration error	■ Check the gas supply pressure. ■ Check gas solenoid valve strainer on the inlet side for contamination. ■ Check ionization electrode for contamination. ■ Check flue system. Remove flue gas recirculation if necessary. ■ Check the connecting cable to the fan unit. ■ Check whether condensate is backed up. Reset the boiler.
F.348	Burner in a fault state	Gas modulation valve	If several boilers are connected to a common flue system: Check whether “Multiple connections” is set in the commissioning assistant. Check the flue system for unrestricted flow. If the fault persists, replace the gas fan unit.
F.349	Burner in a fault state	Air mass flow rate not detected correctly in fan unit.	■ Check for dust contamination in the ventilation air. ■ Check flame body assembly for contamination. Reset the boiler. If the fault occurs repeatedly, replace the gas fan unit.
F.350, F.351	Burner in a fault state	Ionization current lies outside the permissible range	Replace BCU burner control unit: See page 89.
F.352	Burner in a fault state	CO limit within boiler exceeded	Check entire flue gas path for the following: ■ Flue gas recirculation ■ Leaks ■ Flue gas back pressure caused by water pocket (if flue system fall is insufficient) ■ Constrictions ■ Blockages Repair flue system if necessary. Reset the boiler.
F.353	Burner shutdown with restart if demand exists	Insufficient gas supply, burner output reduced	Check the gas supply. Optically check input-side screen in the gas solenoid valve for contamination. Reset the boiler.
F.354	Burner in a fault state	Gas modulation valve tolerance outside permissible range	Replace gas fan unit.
F.355	Burner in a fault state	Analogue signal reference check: Flame signal is already present at burner start.	Replace BCU burner control unit: See page 89.
F.357	Burner in a fault state	Insufficient gas supply	■ Check that the gas shut-off valve is open. ■ Optically check input-side screen in the gas solenoid valve for contamination. ■ Test static gas pressure and gas flow pressure. ■ Check that on-site gas line is correctly sized. **Note:** If the building pressure regulator has a leak, you may notice rising pressure when the burner is idle. If the static pressure doesn’t drop, check cable to the fan unit. Check whether the coil resistance at the fuel valve is approx. 4 k Ω (plug 35, contact 2 and 4). Check the ignition electrode for damaged insulation. Reset the boiler.

Fault Messages *(continued)*

Displayed fault code	System characteristics	Cause	Measures
F.359	Burner in a fault state	No ignition spark	■ Check whether the ignition electrode insulation is damaged. ■ Check for a voltage of 120V~ at the ignition module during the ignition phase. If not, replace the BCU burner control unit. ■ If 120V~ is present at the ignition module but there is still a fault, replace the ignition module. ■ Check connecting cables and leads from ignition module and ignition electrode. Reset the boiler. ■ Check the condensate system for a backup or clog, replace the insulation blocks, electrodes and flame body if necessary.
F.361	Burner in a fault state	Flame signal is not present or insufficient at burner start.	Check ionization electrode and connecting cable. Check plug-in connections for loose contacts. **Note:** Deposits on the electrodes indicate foreign bodies in the combustion air. Check the installation room and flue system for causes of the deposits. For example: Laundry detergents, cleaning agents, toiletries, deposits in the ventilation air supply (chimney). Reset the boiler
F.366, F.367	Burner in a fault state	Gas valve electricity supply does not turn off.	Replace BCU burner control unit: See page 89.
F.369	Burner in a fault state	Flame loss immediately after flame formation (during safety time)	Check gas supply (gas pressure). Check balanced flue system for flue gas recirculation. Check ionization electrode: ■ Clearance to flame body assembly. ■ Contamination on electrode. Reset the boiler.
F.370	Burner in a fault state	Fuel valve or modulation valve will not close.	Reset the boiler. If fault occurs repeatedly, replace fan unit.
F.372	Burner in a fault state	Repeated flame loss during calibration	■ Check ionization electrode and connecting cable. ■ Check plug-in connections for loose contacts. ■ Check flue system. Remove flue gas recirculation if necessary. ■ Check system for condensate backup. ■ Visually inspect gas solenoid valve inlet and strainer on the inlet side for contamination. **Note:** To prevent water damage, detach fan unit before removing the burner. Deposits on the electrodes indicate foreign bodies in the combustion air. Check the installation room and flue system for causes of the deposits. For example: Laundry detergents, cleaning agents, toiletries, deposits in the ventilation air supply (chimney). If flame body assembly and ionization electrode have been replaced, also clean fan unit, gas/air channel and Venturi extension. Reset the boiler.
F.373	Burner in a fault state	Heat transfer too low during calibration Temperature limiter has shut down.	■ Ensure adequate heat transfer. ■ Check circulation pump for faults, scale or blockages. ■ Check 3-way diverter valve function in actuator test. Vent the system. ■ Check function of flow sensor. Reset the boiler.

Fault Messages *(continued)*

Displayed fault code	System characteristics	Cause	Measures
F.377	Burner in a fault state	Post-processing of ionization adjustment: Stabilization conditions for post calibration not met	Check gas type setting. If fault recurs, replace BCU burner control unit: See page 89. Reset the boiler.
F.378	Burner in a fault state	Flame loss during stabilization or operating phase	■ Check gas supply (gas pressure). ■ Check flue gas recirculation. ■ Check for contamination of ionization electrode and flame body assembly. Reset the boiler.
F.379	Burner in a fault state	Flame signal not present or insufficient	■ Check ionization electrode connecting cable for damage and firm seating. ■ Check ionization electrode; replace if necessary. Reset the boiler.
F.380	Burner in a fault state	Flame loss immediately after flame formation (during safety time)	Check gas supply (gas pressure). Check balanced flue system for flue gas recirculation. Check ionization electrode and flame body assembly: ■ Clearance to flame body assembly ■ Contamination on electrode Reset the boiler.
F.381	Burner in a fault state	Flame loss during operating phase	Check gas supply (gas pressure). Check balanced flue system for flue gas recirculation. Check ionization electrode and flame body assembly: ■ Clearance to flame body assembly. ■ Contamination on electrode Reset the boiler.
F.382	Burner in a fault state	Error counter has exceeded limit.	Reset the boiler. Work through fault analysis using fault history.
F.383, F.384	Burner in a fault state	Possible contamination of gas line	■ Check gas line for contamination. ■ Check the gas supply pressure. ■ Replace gas fan if necessary. Reset the boiler.
F.385	Burner in a fault state	Short circuit, signal 1, ionization current. BCU burner control unit faulty.	Check ionization electrode and connecting cable. If fault persists, replace BCU burner control unit: See page 89. Reset the boiler.
F.386	Burner in a fault state	BCU burner control unit faulty	Replace BCU burner control unit: See page 89. Reset the boiler.
F.387	Burner in a fault state	Ground fault, ionization current. BCU burner control unit faulty.	1. Check system for condensate backup. ■ Check the condensate drain and siphon trap. ■ Replace insulation blocks, electrodes and flame body assembly if necessary. **Note:** To prevent water damage, detach fan unit before removing the burner. Protect electronic components from escaping condensate. If there is no condensate backup, take the following steps: 2. Check ionization electrode and connecting cable. If fault persists, replace BCU burner control unit: See page 89. Reset the boiler.
F.388	Burner in a fault state	BCU burner control unit faulty	Replace BCU burner control unit: See page 89. Reset the boiler.

Fault Messages *(continued)*

Displayed fault code	System characteristics	Cause	Measures
F.395	Burner in a fault state	IO electrode ground fault, BCU burner control unit faulty	Check ignition electrode for ground fault. If fault persists, replace BCU burner control unit: See page 89. Reset the boiler.
F.396	Burner in a fault state	BCU burner control unit faulty	Replace BCU burner control unit: See page 89. Reset the boiler.
F.399	Burner in a fault state	IO electrode ground fault, BCU burner control unit faulty	Check IO electrode for ground fault. If fault persists, replace BCU burner control unit: See page 89. Reset the boiler.
F.400	Burner in a fault state	BCU burner control unit faulty	Replace BCU burner control unit: See page 89. Reset the boiler.
F.401	Burner in a fault state	IO electrode ground fault, BCU burner control unit faulty	Check IO electrode for ground fault. If fault persists, replace BCU burner control unit: See page 89. Reset the boiler.
F.402	Burner in a fault state	BCU burner control unit faulty	Replace BCU burner control unit: See page 89. Reset the boiler.
F.403	Burner in a fault state	Ionization electrode ground fault, BCU burner control unit faulty	Check IO electrode for ground fault. If fault persists, replace BCU burner control unit: See page 89. Reset the boiler.
F.404	Burner in a fault state	BCU burner control unit faulty	Replace BCU burner control unit: See page 89. Reset the boiler.
F.405	Burner in a fault state	Ionization electrode ground fault, BCU burner control unit faulty	Check IO electrode for ground fault. If fault persists, replace BCU burner control unit: See page 89. Reset the boiler.
F.406, F.408, F.410	Burner in a fault state	BCU burner control unit faulty	Replace BCU burner control unit: See page 89. Reset the boiler.
F.416	Burner locked out	Flue gas temperature sensor incorrectly positioned	Fit flue gas temperature sensor correctly. See “Repairs”. Carry out mains reset after fault has been remedied.
F.417, F.418	Burner in a fault state	BCU burner control unit faulty	Replace BCU burner control unit: See page 89. Reset the boiler.
F.425	System operating normally; calculation not working	Time synchronization failed	Set the time. If external time is used, check parameters 1504 and 508.
F.430	Normal operation in line with target values of boiler	Communication error gateway	Check gateway module connecting cable and power supply.
F.446	Burner in a fault state	Deviation, boiler supply temperature sensor/ high limit safety cutout	Check the supply temperature sensor/high limit safety cut-out. Check plug-in connection and lead to sensor. Reset the boiler.

Fault Messages *(continued)*

Displayed fault code	System characteristics	Cause	Measures
F.447, F.448	Burner in a fault state	Deviation, ionization current signal	Replace BCU burner control unit: See page 89. Reset the boiler.
F.449, F.450, F.451, F.452	Burner in a fault state	Error in scheduled program run monitoring	Reset the boiler. If fault recurs, replace BCU burner control unit: See page 89.
F.453	Burner in a fault state	Synchronization error, sequence	Reset the boiler. If fault recurs, replace BCU burner control unit: See page 89.
F.454	Burner in a fault state	Incorrect software version	Flash the correct software version for the BCU burner control unit.
F.455	Burner in a fault state	Error in program run monitoring	Reset the boiler. If fault recurs, replace BCU burner control unit: See page 89.
F.456	Burner in a fault state	Error in program run monitoring	Reset the boiler. Check fan for sluggishness. In the case of severe contamination or grinding noises, replace fan unit.
F.457	Burner in a fault state	Fan sluggish or blocked.	Reset the boiler.
F.463	Burner in a fault state	Contaminated combustion air, flue gas recirculation	Boiler installation and service instructions Check flue system for contamination and flue gas recirculation. Clean flue system if necessary. Reset the burner. **Note:** Deposits on the electrodes indicate foreign bodies in the combustion air. Check the installation room and flue system for causes of the deposits. For example: Laundry detergents, cleaning agents, toiletries, deposits in the ventilation air supply (chimney) If flame body assembly and ionization electrode have been replaced, also clean fan unit, gas/air channel and Venturi extension. Reset the boiler.
F.464	Burner in a fault state	Ionization current too low during calibration. Differential compared to previous value not plausible.	■ Check ionization electrode and connecting cable. Check plug-in connections for loose contacts. ■ Check whether there is a lot of dust in the ventilation air (e.g. from construction work). ■ Check flue system. Remove flue gas recirculation if necessary. ■ Check system for condensate backup. Reset the boiler. **Note:** To prevent water damage, detach fan unit before removing the burner. Protect electronic components from escaping condensate. If fault is permanently present, replace the BCU burner control unit: See page 89. **Note:** Deposits on the electrodes indicate foreign bodies in the combustion air. Check the installation room and flue system for causes of the deposits. For example: Laundry detergents, cleaning agents, toiletries, deposits in the ventilation air supply (chimney) If flame body assembly and ionization electrode have been replaced, also clean fan unit, gas/air channel and Venturi extension.

Fault Messages *(continued)*

Displayed fault code	System characteristics	Cause	Measures
F.467	Burner in a fault state	Gas supply insufficient during calibration. Contaminated or insufficiently sized gas line.	■ Test static gas pressure and gas flow pressure. ■ Check that on-site gas line is correctly sized. ■ Visually inspect gas solenoid valve inlet and strainer on the inlet side for contamination. Reset the boiler. **Note:** Contamination from a brazed gas line, for example, can block up the gas solenoid valve strainer on the inlet side.
F.468	Burner in a fault state	Ionization current too high during calibration	Check gap between ionization electrode and flame body assembly. Check whether there is a lot of dust in the ventilation air (e.g. from construction work). Reset the boiler. **Note:** Deposits on the electrodes indicate foreign bodies in the ventilation air. Check the installation room and flue system for causes of the deposits. For example: Laundry detergents, cleaning agents, toiletries, deposits in the ventilation air supply (chimney) If flame body assembly and ionization electrode have been replaced, also clean fan unit, gas/air channel and Venturi extension.
F.471	No call for heat	Lead break or short circuit	■ Check system (plug 33). ■ Check lead and plug-in connection. ■ Measure, to see if supply voltage to sensor is 5V–.
F.473	No call for heat	HMU heat management unit communication error	Check connecting cable between BCU burner control unit and HMU heat management unit.
F.474	Burner in a fault state	Error in scheduled program run monitoring	Reset the boiler. If fault recurs, replace BCU burner control unit: See page 89.
F.527	Burner in a fault state	Incorrect parameter set, HMU heat management unit	Overwrite (flash) the HMU heat management unit with the correct parameter set: See page 89.
F.528	Burner in a fault state	Incorrect parameter set, BCU burner control unit	Overwrite (flash) the BCU burner control unit with the correct parameter set: See page 89.
F.540	Burner in a fault state	Condensate backup in the heat cell	■ Check system for condensate backup. ■ Check the condensate drain and siphon trap. ■ Replace insulation blocks, electrodes and flame body assembly if necessary. **Note:** To prevent water damage, detach fan unit before removing the burner. Protect electronic components from escaping condensate. Reset the boiler.

Note: If subscriber faults occur, “Fault, subscriber ...” is displayed.

Repairs

IMPORTANT

Residual water will escape when the boiler or one of the following components is fitted or removed:
- **Water-filled pipework**
- **Flow switch**
- **Heat exchanger**
- **Circulation pumps**
- **Plate heat exchanger (B1KE)**
- **Components fitted in the heating water or DHW circuit.**

Water ingress can result in damage to other components.

Protect the following components against ingress of water:
- **Control unit components (in particular in the maintenance position and when open)**
- **Electrical components**
- **Plug-in connections**
- **Electrical cables/leads**

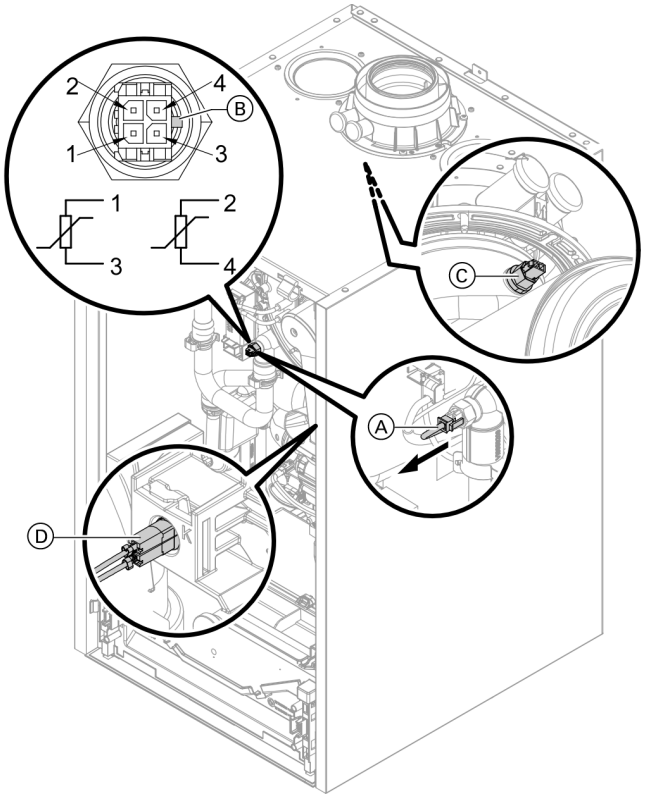

Shutting down the boiler
1. Switch off the power supply.
2. Shut off the gas supply.
3. If the boiler needs to be removed:
   - Disconnect the balanced flue system.
   - Drain the boiler on the heating water and DHW sides.
   - Disconnect the on-site cables/leads.

Checking the temperature sensors
Boiler temperature sensor (dual sensor)
1. Check the leads and plugs of supply temperature sensors Ⓐ.
2. Disconnect the leads from supply temperature sensors Ⓐ.
3. Check the sensor resistance. Note position of guide lug Ⓑ.
   - Sensor 1: Connections 1 and 3
   - Sensor 2: Connections 2 and 4

Compare the resistances with the value for the current temperature from the following diagram. In the event of severe deviation (> 10%), replace the dual sensor.

WARNING

The dual sensor is directly immersed in the heating water (risk of scalding). Drain the boiler on the heating water side before replacing the sensor.

WARNING

Risk of electric shock from escaping heating water. Check the dual sensor for leaks.

Flue gas temperature sensor
1. Check the lead and plug of flue gas temperature sensor Ⓒ.
2. Disconnect leads, flue gas temperature sensor Ⓒ.
3. Rotate sensor (anti-clockwise) by ¼ turn to remove it (bayonet fitting).
4. Check the sensor resistance. Compare the resistance with the value for the currently recorded temperature from the following diagram. In the event of severe deviation (> 10%), replace the sensor.
5. Rotate sensor (clockwise) by ¼ turn to install it.

WARNING

Escaping flue gas can cause poisoning.
When restarting, check for leaks on the flue gas side.

6. Reconnect leads, flue gas temperature sensor Ⓒ.
7. If the permissible flue gas temperature has been exceeded, the flue gas temperature sensor locks out the boiler. Reset the burner on the programming unit once the flue system has cooled down.

Repairs *(continued)*

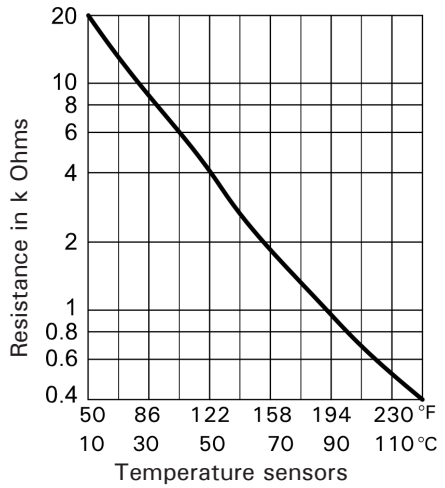

Sensor type: NTC 10 kΩ

- Flue gas temperature sensor
- Supply temperature sensor
- Tank temperature sensor
- Outlet temperature sensor
- Temperature sensor, low loss header

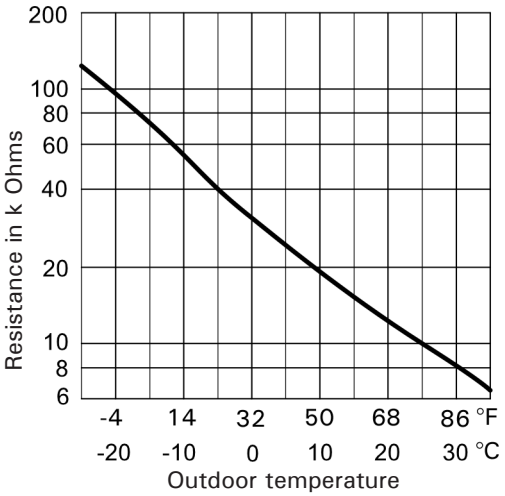

Sensor type: NTC 10 kΩ

- Outside temperature sensor

Tank temperature sensor/outlet temperature sensor

1. Check lead and plug of tank temperature sensor [5] or outlet temperature sensor [4].
2. Disconnect wires of sensor plug.
3. Check the sensor resistance. Compare the resistance with the value for the current temperature from the following diagram.
   In the event of severe deviation (> 10%), replace the sensor.

Outside temperature sensor

1. Check the cable and plug of the outside temperature sensor.
2. Disconnect wires 1 and 2 from terminal [1] on the wiring panel.
3. Check the sensor resistance. Compare the resistance with the value for the current temperature from the following diagram.
   If the results are very different from the curve (> 10 %), disconnect the wires from the sensor.
   Repeat the test directly on the sensor.
   Check the on-site lead. 2-core cable, length up to 115 ft (35 m) with a cross-section of 16 AWG (1.5 mm2)
   Depending on the result, replace the lead or the outside temperature sensor.

Replacing the HMI connecting cable

IMPORTANT

Incorrect routing of the cable can lead to heat damage and impairment of the EMC properties.
For positioning and securing of the cable (fixing point of the cable tie) see connecting cable installation instructions.

Repairs *(continued)*

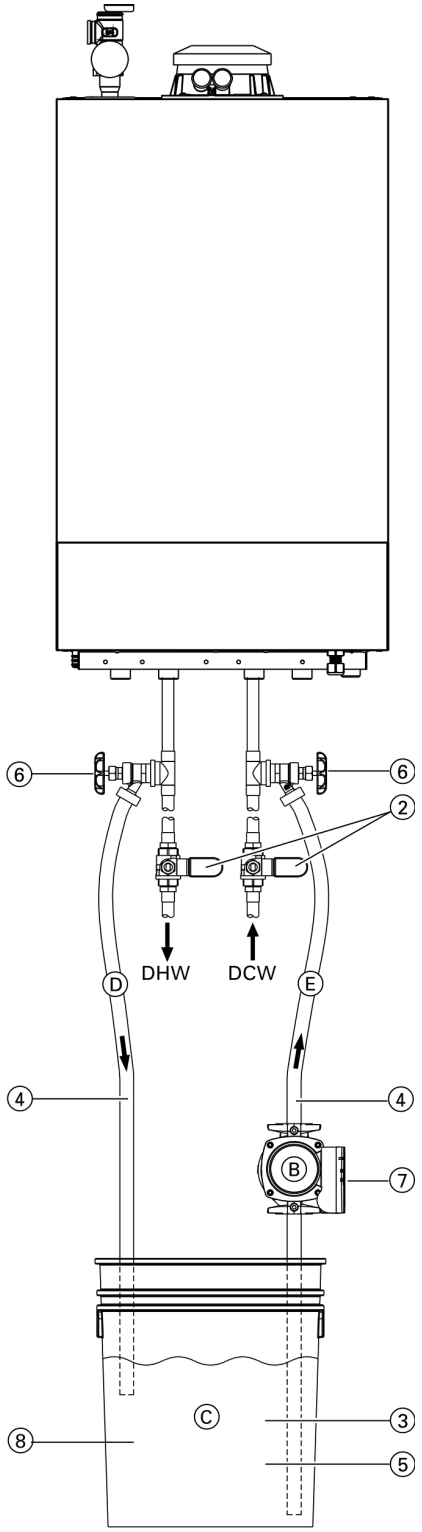

The brazed plate heat exchangers operate with high turbulence flow, even at low flow rates. This high turbulence keeps small particles in suspension minimizing fouling and scaling. In some applications the fouling can be very high (e.g. when using extremely hard water at high temperatures). It is always possible to clean the heat exchanger by circulating a cleaning solution. For optimum cleaning, the cleaning solution flow rate should not exceed the normal flow rate. Clean at regular intervals.

Note: Only chemical cleaning is possible (use chemicals which do not attack copper and stainless steel). Consult a plate heat exchanger cleaning specialist.

1. Disconnect electrical power to the boiler.
2. Close the shutoff valves and isolate boiler water from both heating system and domestic cold water in.
3. Pour approximately 5 gallons of new, food grade, white vinegar or citric acid into a pail.
4. Place the discharge hose Ⓓ and hose Ⓔ (connected to the pump inlet) into the pail of cleaning solution.
5. Attach other end of the hoses Ⓓ and Ⓔ to the heat exchanger.
6. Open both drain valves.
7. Operate the pump and allow the cleaning solution to circulate through the DHW portion of the heat exchanger for at least 60 minutes. Then turn off the pump.
8. Empty the pail and fill with clean potable water. Rinse the cleaning solution from the DHW heat exchanger by circulating clean water through it for at least 7 minutes. Repeat if necessary.
9. Close the drain valve, disconnect both hoses and return the system into operation.

Legend

Ⓐ Vitodens 100 B1KE
Ⓑ Circulating pump (field supplied)
Ⓒ Cleaning solution (field supplied)
Ⓓ DHW discharge hose (field supplied)
Ⓔ DCW inlet hose (field supplied)

Repairs *(continued)*

Checking the plate heat exchanger

B1KE-120

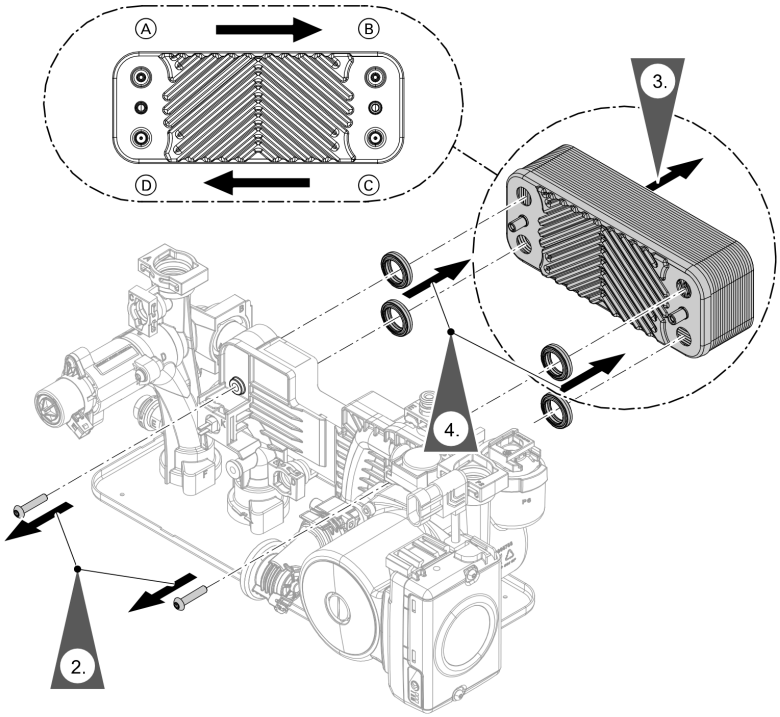

B1KE-199

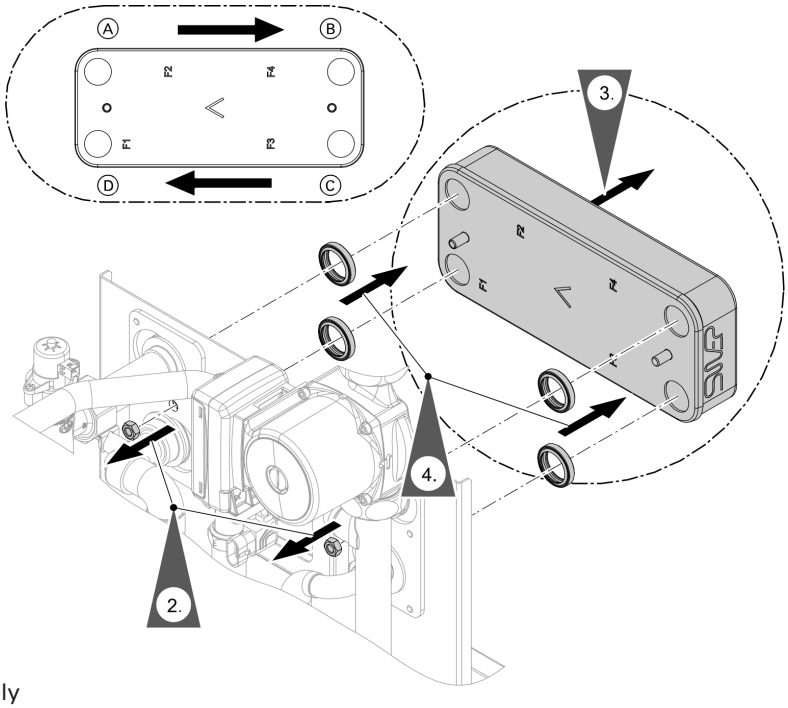

Legend

Ⓐ Heating water supply
Ⓑ Heating water return
Ⓒ Cold water
Ⓓ DHW

Repairs *(continued)*

1. Shut off and drain the boiler on the heating water and DHW sides.
2. Undo screws.
3. Remove plate heat exchanger.
   Note: During and after removal, small amounts of water may trickle from the plate heat exchanger.
4. Remove gaskets and dispose of them.
5. Check connections on the DHW side for scaling. Clean or replace the plate heat exchanger as required.
6. Check connections on the heating water side for contamination. Clean or replace the plate heat exchanger as required.
7. Install plate heat exchanger in reverse order using new gaskets.
   Screw torque: 28 lb.in ± 2 (3.2 Nm ± 0.2)
   Note: During installation, ensure the connections are positioned and the gaskets seated correctly.

WARNING

Risk of electric shock from escaping heating water or DHW.
Check all water side connections for tightness.

Removing the hydraulic unit
If components of the hydraulic unit have to be replaced.

- Close the gas shut-off valve and secure against unintentional reopening.
- Isolate the system from the power supply, e.g. by removing the separate fuse or by means of a mains isolator, and check that it is no longer live.
- Safeguard the system against reconnection.
- Wear suitable personal protective equipment when carrying out any work.

WARNING

Hot surfaces and media can cause burns or scalding.

- **Before maintenance and service work, switch off the boiler and let it cool down.**
- **Never touch hot surfaces on the boiler, burner, flue system or pipework.**

IMPORTANT

Electronic assemblies can be damaged by electrostatic discharge.
Before beginning work, touch grounded objects, such as heating or water pipes, to discharge any static.
Disconnect all water and gas connections.

Repairs *(continued)*

B1HE/KE 85/120

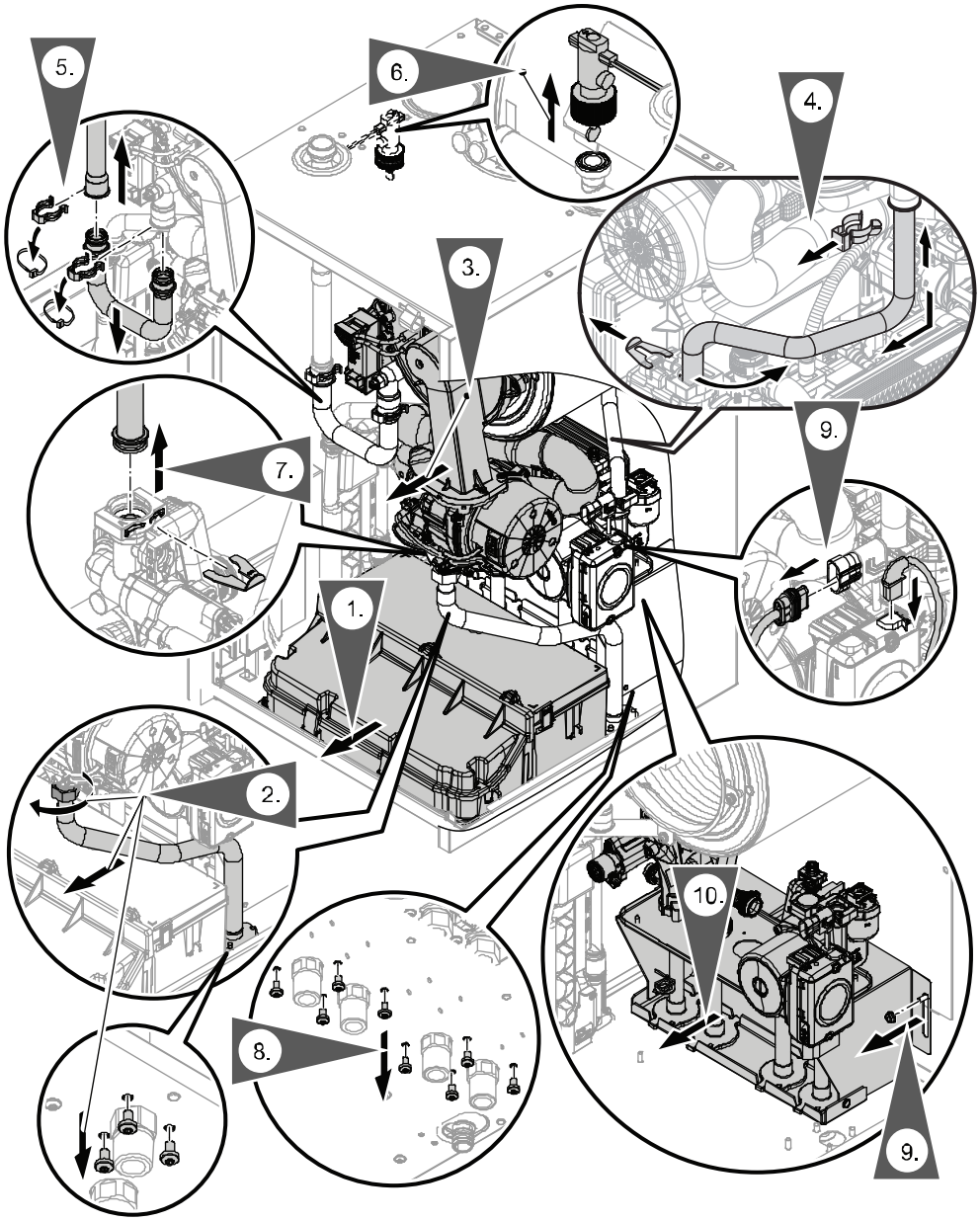

1. Remove the control unit.
2. Unscrew the union nut at the top and screws at the bottom of the gas pipe.
   Note: Hold the union nut in place (with an open ended wrench) to prevent damage to the gas pipe, use the two handed method.
3. Remove the burner.
4. Remove the clips, push the pipe upwards and pivot it backwards. Then remove the pipe downwards.
5. Pull the clip off the supply pipe, new cable ties must be installed when securing the clips.
6. Pull off the clips. Push the supply pipe upwards.
   Note: If necessary, the safety valve with drain must be removed.
7. Undo the screws at the bottom of the hydraulic unit.
8. Unplug the cable.
9. Raise the hydraulic unit and remove it toward the front.

The hydraulic unit is installed in reverse order.

⚠ WARNING

Risk of electric shock from escaping heating water or DHW. Check the dual sensor for leaks.

Repairs *(continued)*

B1HE/KE 150

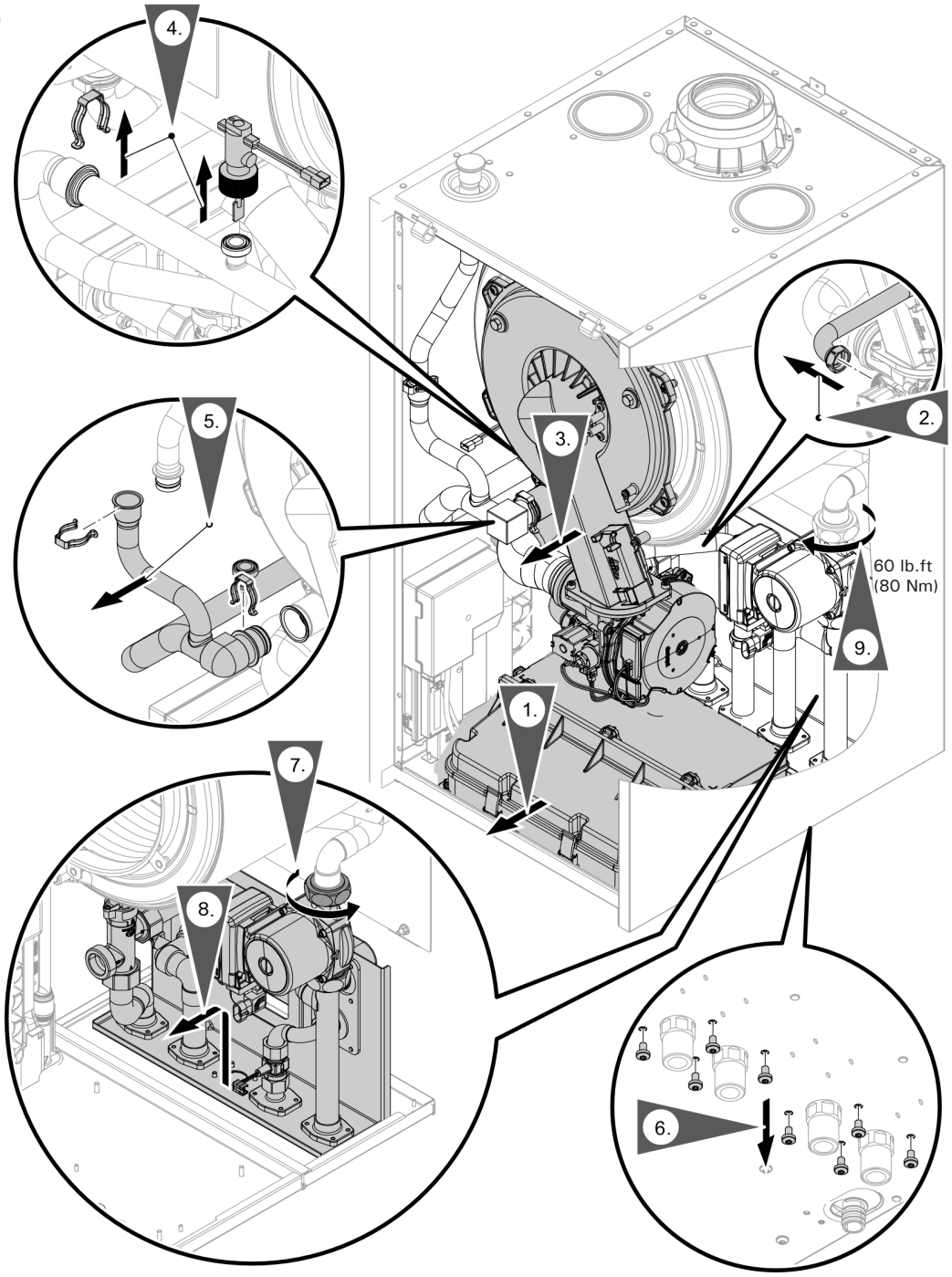

1. Remove the control unit.
2. Loosen the union nut on the gas pipe.
   Note: Hold the union nut in place (with an open ended wrench) to prevent damage to the gas pipe, use the two handed method.
3. Remove the burner.
4. Pull off the clip and remove the flow switch.
5. Pull off the clips and remove the supply pipe toward the front. When refitting the pipes new cable ties must be used to secure the clips.
6. Remove the screws on the hydraulic plate at the bottom of the boiler.
7. Undo the union nut of the boiler pump.
8. Remove the hydraulic unit.
9. The hydraulic unit is installed in reverse order.

WARNING

Risk of electric shock from escaping heating water or DHW. Check the dual sensor for leaks.

Repairs *(continued)*

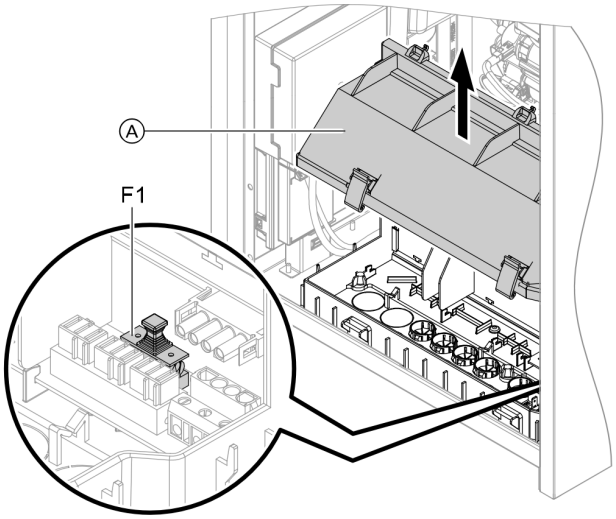

Checking the fuse

1. Turn off the ON/OFF switch.
2. Depending on the configuration: Move programming unit together with bracket to maintenance position.
3. Remove cover Ⓐ.
4. Check fuse F1 (see connection and wiring diagram).

WARNING

Incorrect or improperly fitted fuses can lead to an increased risk of fire.

- **Insert fuses without using any force. Position fuses correctly.**
- **Only use structurally identical types with the specified response characteristics.**

Opening the Junction Box

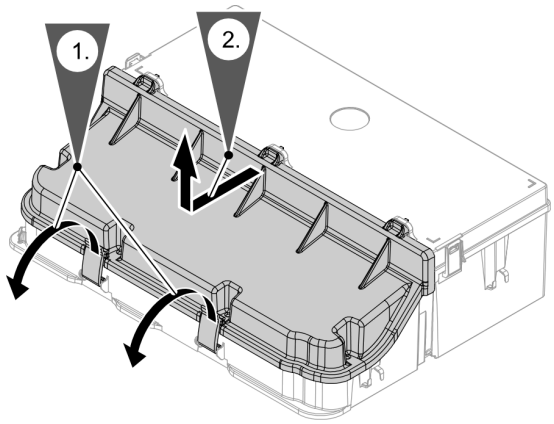

1. Folding down the red clips to open the front cover of the junction box.
2. Open the front cover by a turning movement.

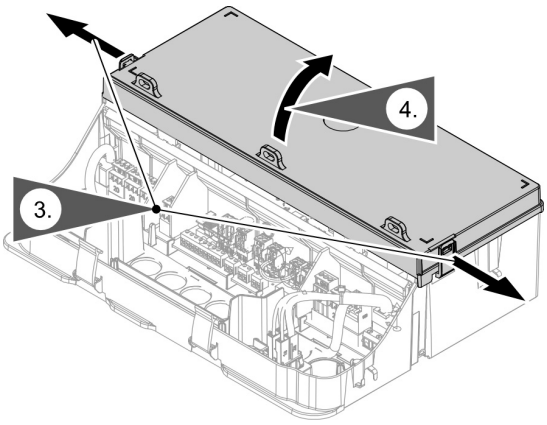

3. Push the side clips to the side to unlock the rear cover.
4. Now the rear cover is unlocked and can be turned out upwards and opened

Opening the Junction Box *(continued)*

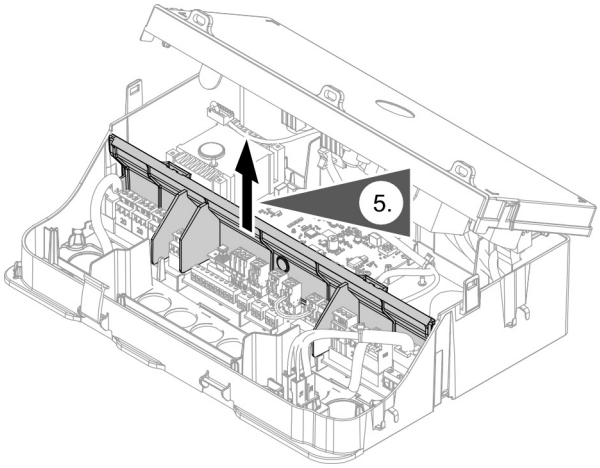

5. Now the separation wall can be removed.
   Pull it vertically upwards out of the lateral guides to its left and right.

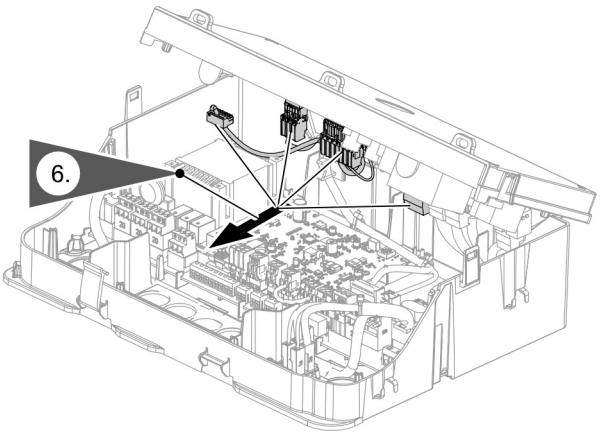

6. The cables are now exposed and can be pulled off the pcbs.

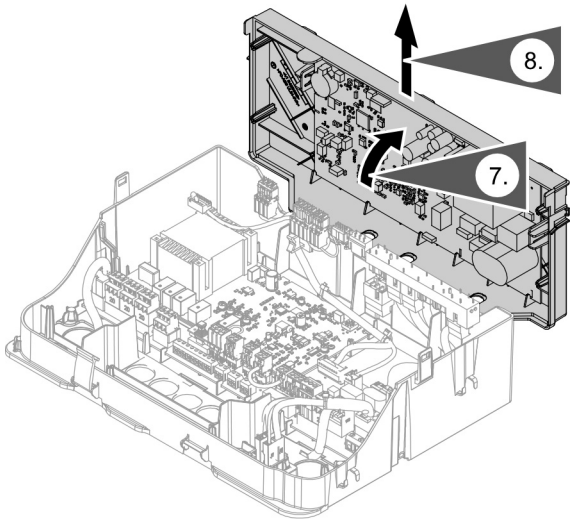

7. The rear cover can then be removed and the circuit boards are fully visible.
   The interlock must be observed.
8. Lift up
   Refit in reverse order
   When assembling the separation wall, in addition to the lateral guides, pay attention to the latching with the rear cover.

WARNING

Errors in assembly can result in a leaking air box.

Boiler Functions

Purging program

During the purging program, the circulation pump will be alternately switched on and off for 30 sec over a period of 20 min.
The 3-way diverter valve alternates between central heating and DHW heating for a certain period of time.
The burner is switched off during the purging program.

Activate venting program: See “Commissioning, inspection and maintenance”.

Heating curve

The heating curves represent the relationship between the outside temperature and the supply temperature.
Simplified: The lower the outside temperature, the higher the supply temperature must be in order to reach the target room temperature.

Factory settings:
- Slope = 1.4
- Level = 0

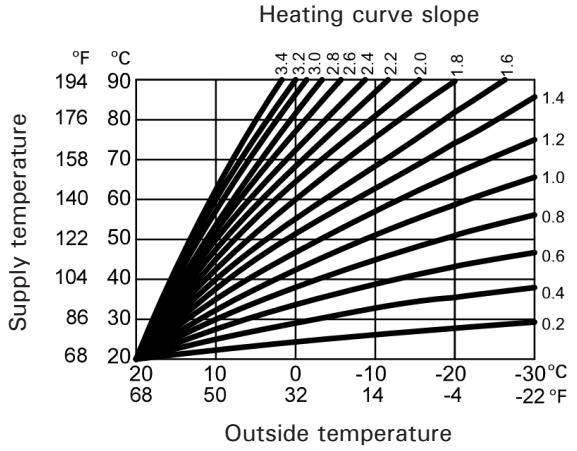

Slope setting ranges:
- Infloor heating systems: 0.2 to 0.8
- Low temperature heating systems: 0.8 to 1.6

Changing the slope and level

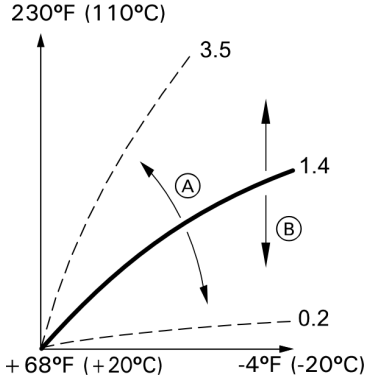

Legend
Ⓐ Changing the slope
Ⓑ Changing the level
(vertical parallel offset of the heating curve)

Heating operation

- Weather-compensated operation:
  The control unit determines a target supply temperature for the boiler, subject to the outside temperature and the slope/level of the heating curve.
  Note: The target value is only requested when the contact at plug 96 is closed. When the contact is open, there is no demand and no frost protection.
- Constant operation with optional room thermostat:
  System with one heating circuit without mixing valve.
  The rooms are heated in accordance with the settings of the room temperature controller/room thermostat (accessories).
  If the room temperature controller/room thermostat issues a demand, the standard target supply temperature is maintained.
  Note: The target value is requested when the contact at plug 96 is closed.
  When the contact is open, there is no demand and no frost protection.

Filling program

In the delivered condition, the 3-way diverter valve is set to its central position, so the system can be filled completely. After the control unit has been switched on, the 3-way diverter valve no longer goes into its central position.
If the system is to be filled with the control unit switched on, the 3-way diverter valve is moved to its central position in the filling program and the pump is started.

Activate filling program: See “Commissioning, inspection and maintenance”.

In this position, the control unit can be switched off and the system can be filled completely. When the function is activated, the burner shuts down. The program automatically becomes inactive after 20 min.

DHW Heating

Vitodens 100, type B1HE
The burner, circulation pump and 3-way diverter valve are started or changed over if the tank temperature is 2.5 K (5°F) below the target tank temperature.
The factory-set target boiler water temperature is 20 K (36°F) higher than the target tank temperature.
If the actual tank temperature exceeds the target tank temperature by 2.5 K (5°F), the burner shuts down and circulation pump run-on begins.

WARNING

Risk of injury due to increased DHW temperature.

Inform the system user of the risk from the raised outlet temperature at the draw-off points. If necessary, provide on-site scald protection measures.

Tank with temperature switch (Aquastat)
The max. permissible target value of the boiler (depending on the boiler) is taken as the target.
Function:
No demand from Aquastat – no frost protection.
Demand from Aquastat – demand for target value (no time program for DHW and no scald protection; no increased DHW hygiene).
Note: The functions maximum duration of DHW heating (factory setting = 60 minutes) and minimum waiting time until the next DHW heating (factory setting = 60 minutes) still apply.
See system configuration, parameter "DHW"

- Gas condensing system boiler:
  If the target DHW temperature is set to over 140°F (60°C)
- Gas condensing combi boiler:
  If there are several draw-off events in quick succession or several boiler calibration processes

Vitodens 100, type B1KE
If a DHW flow rate greater than 0.5 GPM is detected, the boiler switches on and regulates the DHW temperature to the target value.

Increased DHW Hygiene

The DHW can be heated to a specified (higher) target DHW temperature (approx. 149°F (65°C) for a period of one hour.

WARNING

Risk of injury due to increased DHW temperature.

Inform the system user of the risk from the raised outlet temperature at the draw-off points. If necessary, provide on-site scald protection measures.

Call for Heat

- Function:
  - If the external call for heat zone is active (contact plug 96 closed), the heating system is supplied with heat:
    - In weather-compensated operation – according to the current heating curve.
    - In constant operation – according to the adjusted target supply temperature.
  - If the external call for heat is inactive (contact open), the heat supply is stopped.
    No frost protection of the zone.

Overview of the Modules

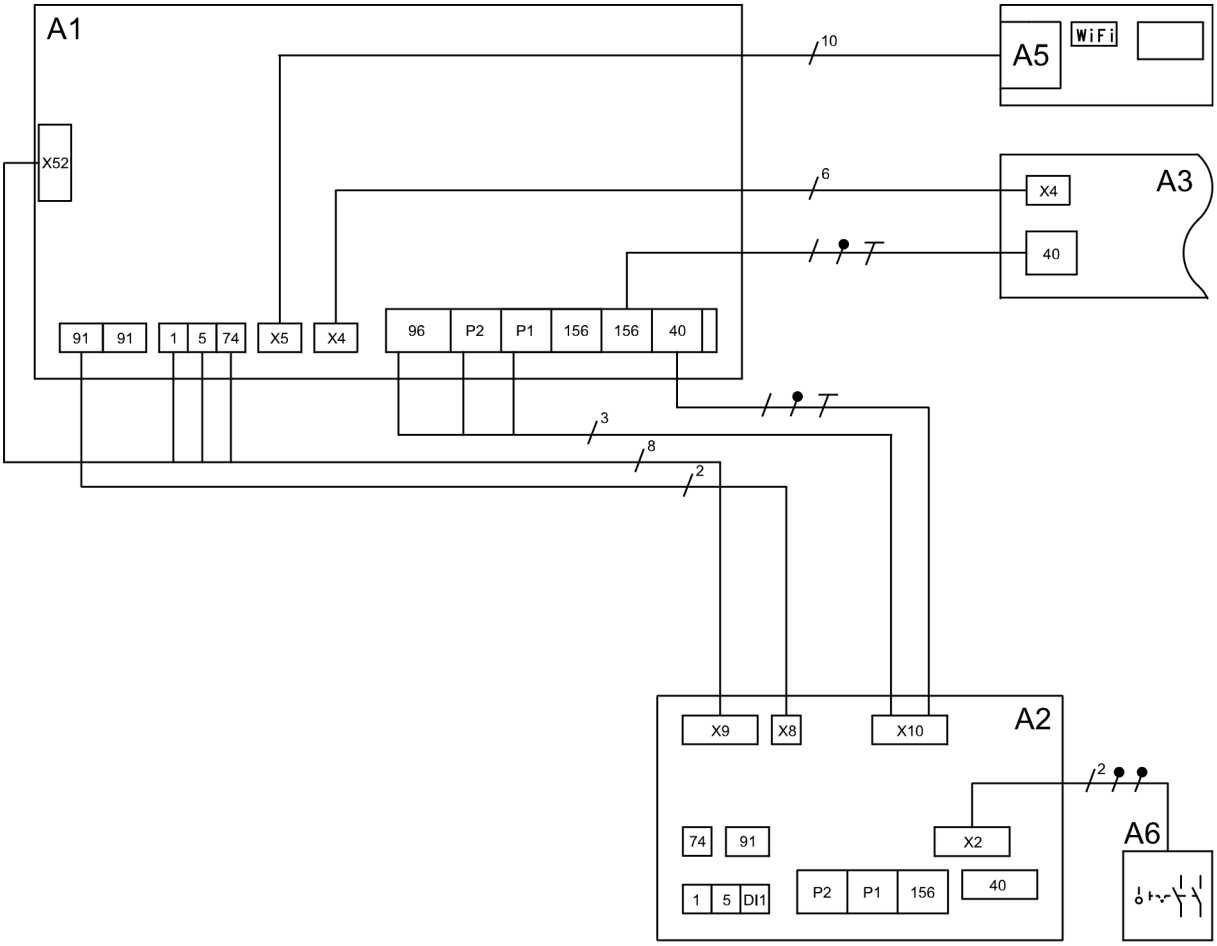

Legend

A1 HMU heat management unit
A2 Wiring panel
A3 BCU burner control unit
A5 HMI programming unit with communication module (TCU 200)
A6 ON/OFF switch

HMU Heat Management Unit

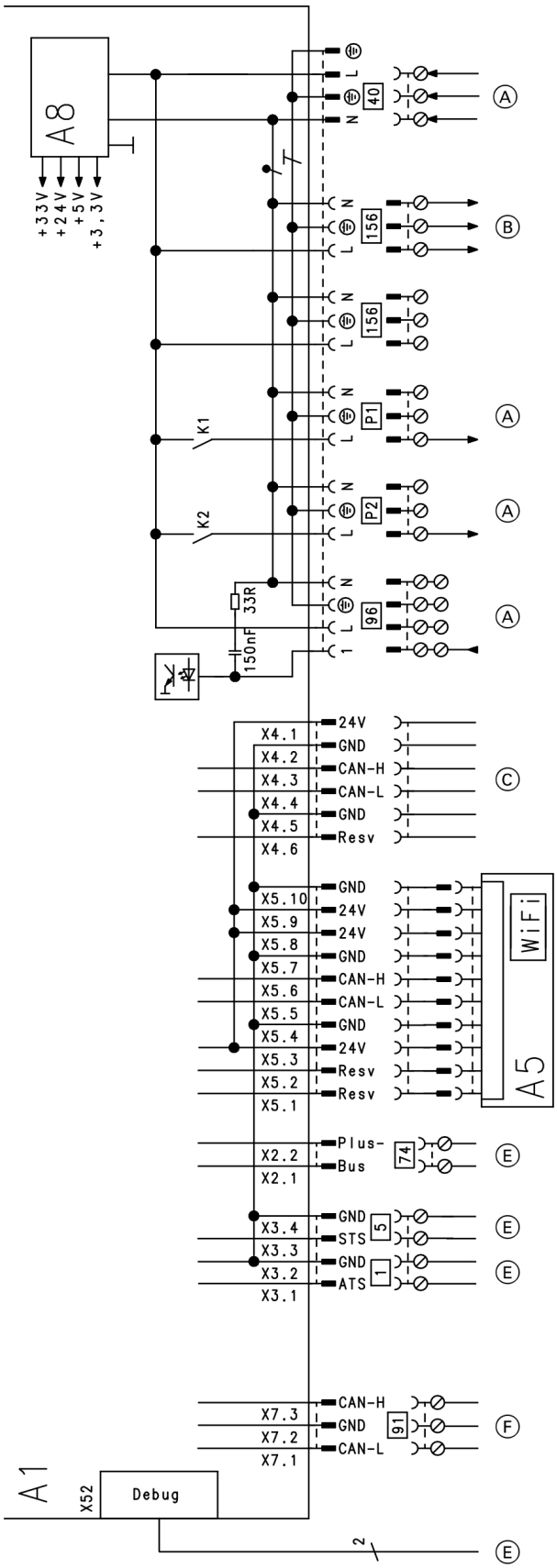

Legend

A1 HMU heat management unit
A5 HMI programming unit with communication module (TCU 200)
A8 Power supply unit
1 Outside temperature sensor (for weather-compensated operation)
5 Tank temperature sensor
40 Power supply
74 PlusBus
91 CAN bus
96 Input 120VAC (function configurable through K1 relay on WP board)
156 No function
P1 Output 120V, 60 Hz
P2 Output 120V, 60 Hz
A To wiring panel X10
B To the BCU burner control unit
C To the BCU burner control unit
D PlusBus connection
E Wiring panel terminal X9
F Wiring panel terminal X8

BCU Burner Control Unit

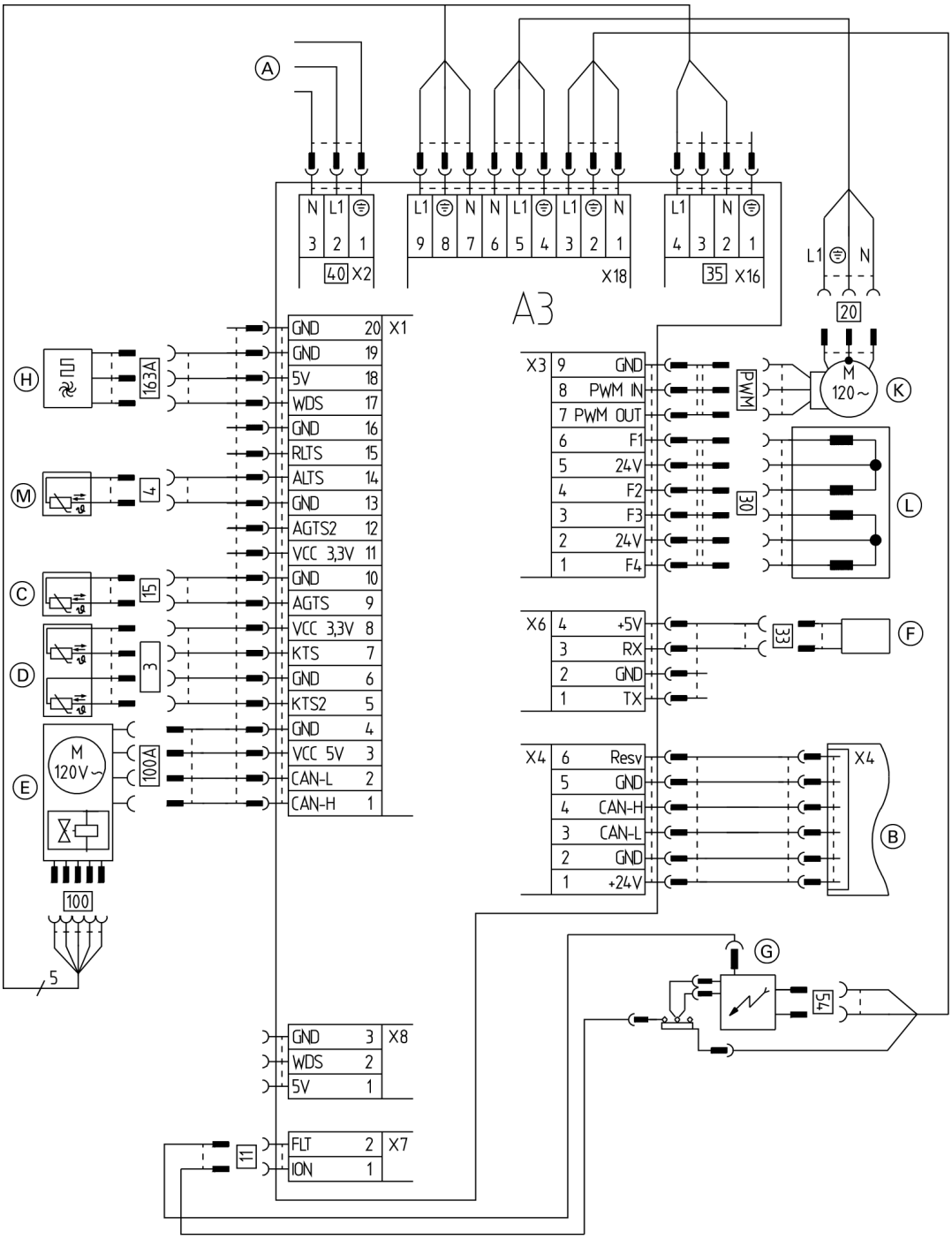

Legend

A3 BCU burner control unit

- Ⓐ HMU heat management unit (plug 156)
- Ⓑ HMU heat management unit (terminal X4)
- Ⓒ Flue gas temperature sensor
- Ⓓ Boiler water temperature sensor 1 and 2
- Ⓔ Gas solenoid valve and fan motor with PWM switching and feedback
- Ⓕ Boiler flow switch
- Ⓖ Ignition unit and flame monitoring
- Ⓗ DHW flow switch (B1KE only)
- Ⓚ Internal circulation pump (primary pump)
- Ⓛ 3-way diverter valve
- Ⓜ DHW outlet temperature sensor (B1KE only)

Wiring Panel

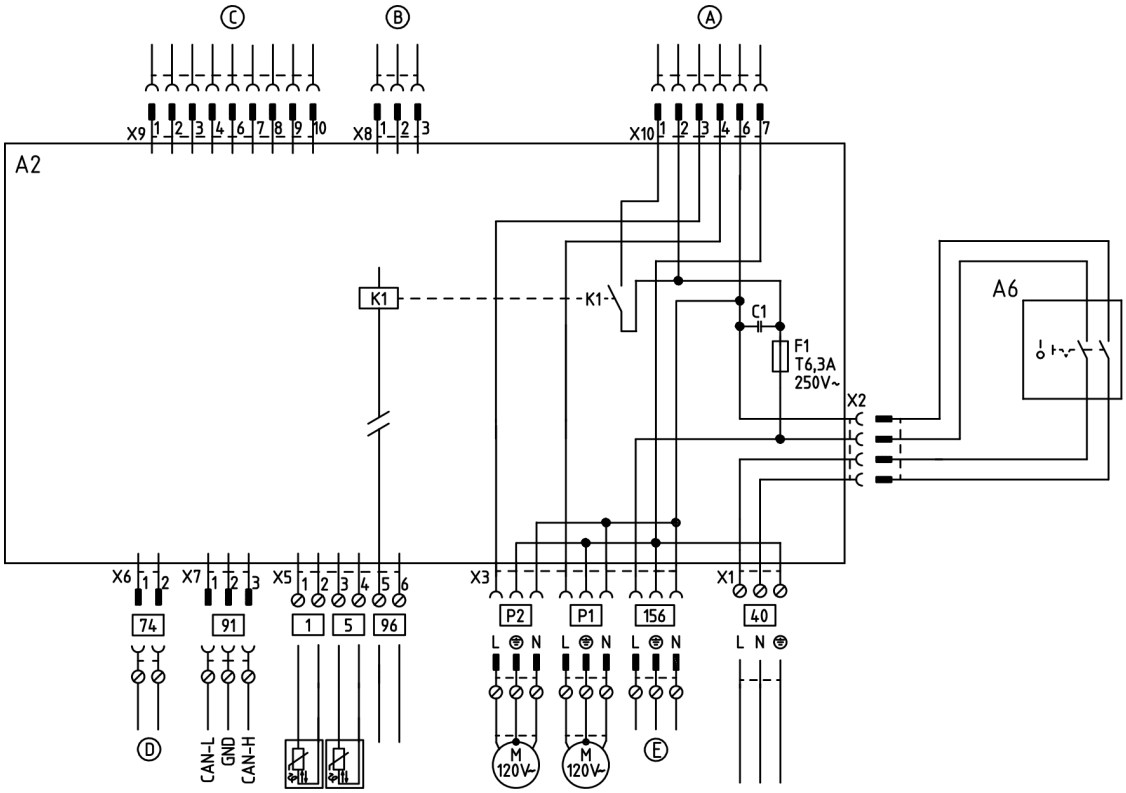

Legend

A2 Wiring panel
A6 ON/OFF switch
40 ON/OFF switch
156 Switched mains output 120VAC, 60 Hz (max. 36 Watts)
P1 Optional DHW pump
P2 Circulation pump, zone 1
96 Connecting the temperature controller (function of plug 96)
5 Tank temperature sensor or temperature switch (Aquastat) B1HE only
1 Outside temperature sensor
91 No function
74 No function
F1 Fuse, 6.3A (slow), 120V
A HMU heat management unit connection, 120VAC
B CAN plug 91, HMU heat management unit
C HMU heat management unit extra low voltage connection

B1HE Models 85 / 120 / 150 / 199

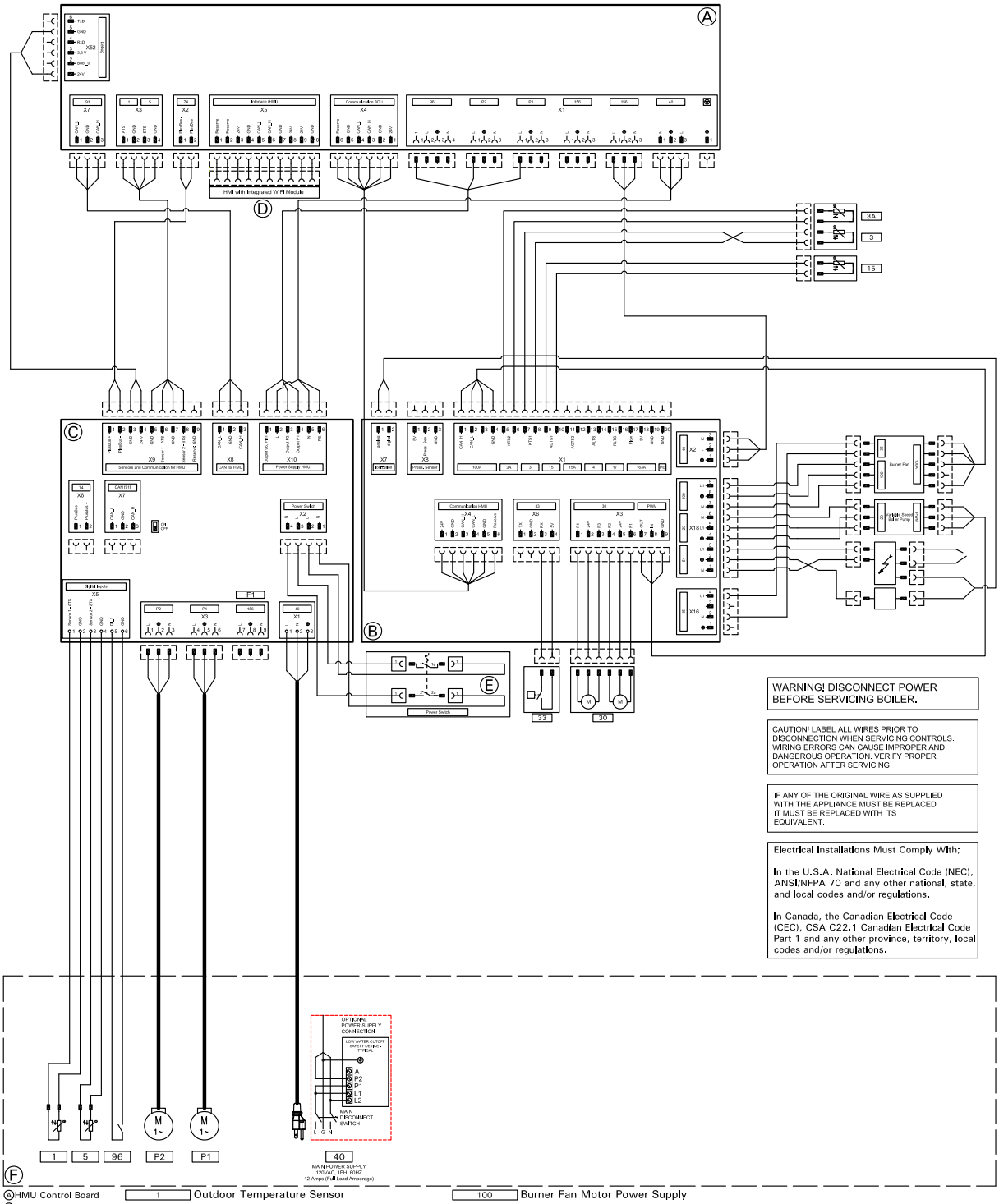

Ⓐ HMU Control Board
Ⓑ BCU Control Board
Ⓒ WP Control Board
Ⓓ HMI With WIFI Module
Ⓔ Power Switch
Ⓕ Field Wiring Connections

1	Outdoor Temperature Sensor
3	Boiler Temperature Sensor 1
3A	Boiler Temperature Sensor 2
5	DHW Temperature Sensor/Dry Contact
11	Ionization Signal
15	Flue Gas Temperature Sensor
20	Variable Speed Boiler Pump (Internal)
30	Diverting Valve Stepper Motor
33	Boiler Flow Switch
35	Gas Valve
40	Power Supply
54	Ignition Transformer
96	Heat Demand Dry Contact

100	Burner Fan Motor Power Supply
100A	Burner Fan Motor Speed Control
P1	DHW Pump/DHW Recirculation Pump
P2	Heating Zone Pump
PWM	Internal Pump Speed Control
F1	Fuse, 6.3A (slow), 120V

B1KE Models 120 / 199

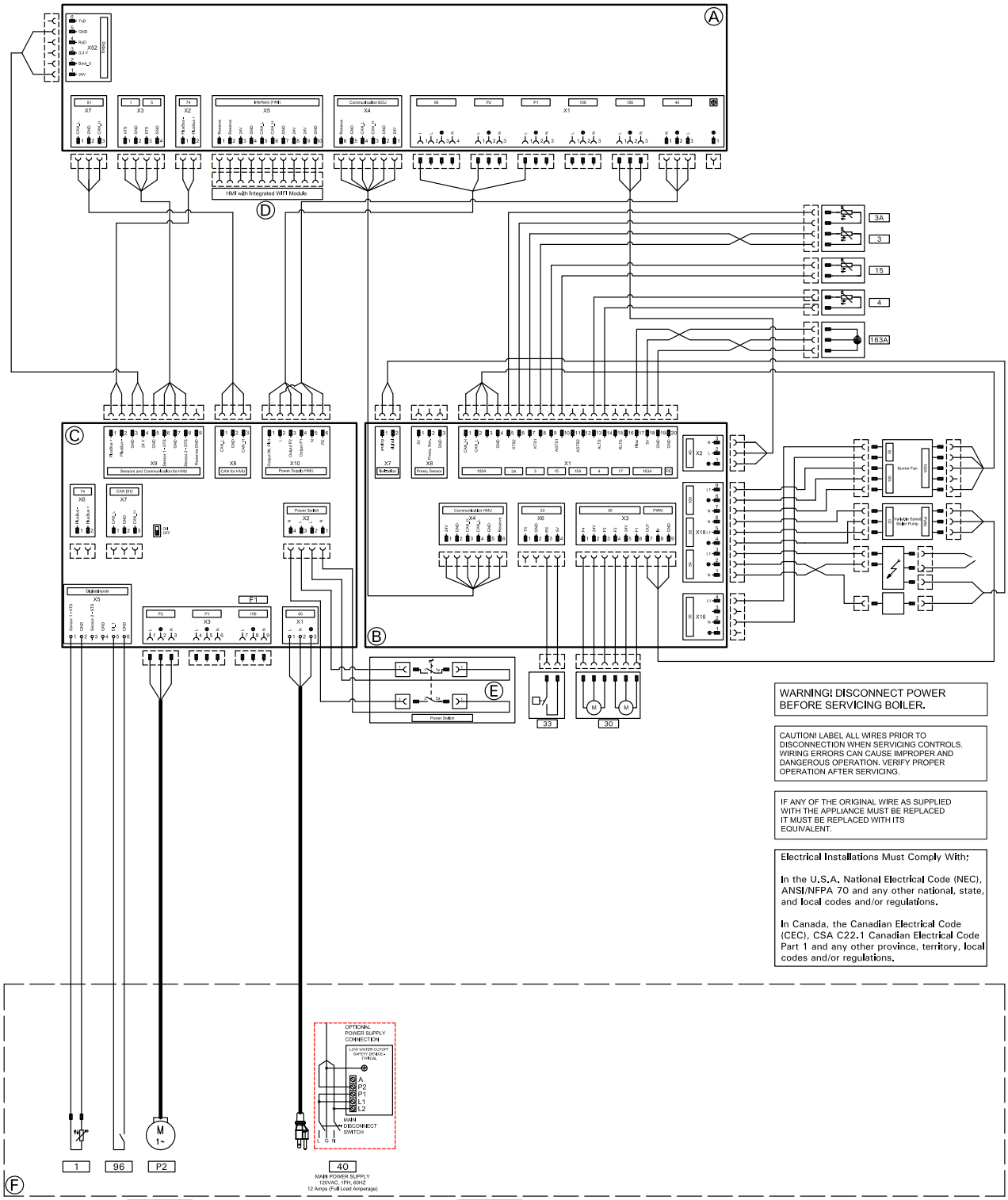

WARNING! DISCONNECT POWER BEFORE SERVICING BOILER.

CAUTION! LABEL ALL WIRES PRIOR TO DISCONNECTION WHEN SERVICING CONTROLS. WIRING ERRORS CAN CAUSE IMPROPER AND DANGEROUS OPERATION. VERIFY PROPER OPERATION AFTER SERVICING.

IF ANY OF THE ORIGINAL WIRE AS SUPPLIED WITH THE APPLIANCE MUST BE REPLACED IT MUST BE REPLACED WITH ITS EQUIVALENT.

Electrical Installations Must Comply With;

In the U.S.A. National Electrical Code (NEC), ANSI/NFPA 70 and any other national, state, and local codes and/or regulations.

In Canada, the Canadian Electrical Code (CEC), CSA C22.1 Canadian Electrical Code Part 1 and any other province, territory, local codes and/or regulations.

Ⓐ HMU Control Board
Ⓑ BCU Control Board
Ⓒ WP Control Board
Ⓓ HMI With WIFI Module
Ⓔ Power Switch
Ⓕ Field Wiring Connections

1	Outdoor Temperature Sensor
3	Boiler Temperature Sensor 1
3A	Boiler Temperature Sensor 2
4	DHW Outlet Temperature Sensor
11	Ionization Signal
15	Flue Gas Temperature Sensor
20	Variable Speed Boiler Pump (Internal)
30	Diverting Valve Stepper Motor
33	Boiler Flow Switch
35	Gas Valve
40	Power Supply
54	Ignition Transformer
96	Heat Demand Dry Contact

100	Burner Fan Motor Power Supply
100A	Burner Fan Motor Speed Control
163A	DHW Flow Switch
P2	Heating Zone Pump
PWM	Internal Pump Speed Control
F1	Fuse, 6.3A (slow), 120V

Service Reports

Measurements		Service date: by:	Service date: by:	Service date: by:	Service date: by:	Service date: by:	Service date: by:	Setpoint value
Static pressure	*"w.c.*							max. 14 "w.c.
Running pressure (supply pressure)								
☐ Natural gas	*"w.c.*							4-14 "w.c.
☐ LPG	*"w.c.*							10-14 "w.c.
Check gas type								
Carbon dioxide content CO_2								
■ at lower end of rated input range	*vol.-%*							
■ at upper end of rated input range	*vol.-%*							
Oxygen content O_2								
■ at lower end of rated input range	*vol.-%*							
■ at upper end of rated input range	*vol.-%*							
Carbon monoxide content CO								
■ at lower end of rated input range	*ppm*							50 ppm air-free*
■ at upper end of rated input range	*ppm*							

* Fuel type, altitude, venting and other site parameters may change.

Technical Data

Gas condensing system boiler

	Boiler Model No.	B1HE-85	B1HE-120	B1HE-150	B1HE-199	B1KE-120	B1KE-199
CSA input Natural gas (NG)	MBH	8.5-85	12-120	15.5-150	19.9-199	12-120	19.9-199
	kW	2.5-24.9	3.5-35.2	4.5-44.0	5.8-58.3	3.5-35.2	5.8-58.3
CSA input Liquid propane Gas (LPG)	MBH	14-85	14-120	22.7-150	22.7-199	14-120	22.7-199
	kW	4.1-24.9	4.1-35.2	6.7-44.0	6.7-58.3	4.1-35.2	6.7-58.3
CSA output/DOE *1	MBH	8-80	11-113	14-141	18.5-187	11-113	18.5-187
heating capacity NG	kW	2.3-23.4	3.2-33.1	4.1-41.3	5.4-54.8	3.2-33.1	5.4-54.8
CSA output/DOE *1	MBH	13-80	13-113	21-141	21-187	13-113	21-187
heating capacity LPG	kW	3.8-23.4	3.8-33.1	6.1-41.3	6.1-54.8	3.8-33.1	6.1-54.8
Net AHRI rating *2	MBH	70	98	123	163	98	163
Heat exchanger surface area	$ft.^2$	12.96	12.96	27.44	27.44	12.96	27.44
	m^2	1.20	1.20	2.55	2.55	1.20	2.55
Min. gas supply pressure							
Natural gas	"w.c.	4	4	4	4	4	4
LPG	"w.c.	10	10	10	10	10	10
Max. gas supply pressure *3							
Natural gas and LPG	"w.c.	14	14	14	14	14	14
A.F.U.E.	%	95	95	95	95	95	95
Weight	lbs	108	108	179	179	110	190
	kg	49	49	81	81	50	86
Shipping weight	lbs	143	143	218	218	146	229
	kg	65	65	99	99	66	104
Boiler water content	USG	1.02	1.02	2.5	2.5	1.02	2.5
	L	3.88	3.88	9.50	9.50	3.88	9.50
Boiler max. flow rate *4	GPM	4.8	6.2	8.8	10.6	6.2	10.6
	L/h	1090	1408	1999	2408	1408	2408
Max. operating pressure							
(max. allowable working pressure)	psig	45	45	60	60	45	60
at 210°F (99°C)	bar	3	3	4	4	3	4
Boiler water temperature							
- Adjustable high limit (AHL) range							
- space heating (steady state)	°F (°C)	68-180 (20-82)					
- DHW tank heating	°F (°C)	180 (82)					
- DHW heating	°F (°C)	180 (82)					
- Fixed high limit (FHL)	°F (°C)	210 (99)					
Boiler connections							
Boiler heating supply and return	NPTM (male)	¾ in	¾ in	1 in	1 in	¾ in	1 in
Pressure relief valve	NPTF	¾ in	¾ in	¾ in	¾ in	¾ in	¾ in
DHW tank heating supply/return	(female)	¾ in	¾ in	1 in	1 in	-	-
DHW heating	NPTM (male)	-	-	-	-	¾ in	1 in
Drain valve	NPTM (male) (male thread)	¾ in	¾ in	¾ in	¾ in	¾ in	¾ in
Dimensions							
Overall depth	inches	19 ¾	19 ¾	21¾	21¾	19 ¾	21¾
	(mm)	(500)	(500)	(550)	(550)	(500)	(550)
Overall width	inches	17¾	17¾	17¾	17¾	17¾	17¾
	(mm)	(450)	(450)	(450)	(450)	(450)	(450)
Overall height	inches	33 ¾	33 ¾	39	39	33 ¾	39
	(mm)	(859)	(859)	(989)	(989)	(859)	(989)

*1 Output based on 140°F (60°C), 120°F (49°C) system supply / return temperature.

*2 Net AHRI rating based on piping and pick-up allowance of 1.15.

*3 If the gas supply pressure exceeds the maximum gas supply pressure value, a separate gas pressure regulator must be installed upstream of the heating system.

*4 See "System Flow Rates" on page 32 in this manual.

Technical Data *(continued)*

Boiler Model No.		B1HE-85	B1HE-120	B1HE-150	B1HE-199	B1KE-120	B1KE-199
Gas supply connection	NPTM (male)	¾ in	¾ in	¾ in	¾ in	¾ in	¾ in
Flue gas *5							
Temperature at boiler return temperature of 86°F (30°C)							
- at rated full load	°F (°C)	99 (37)	102 (39)	106 (41)	104 (40)	102 (39)	104 (40)
- at rated partial load	°F (°C)	95 (35)	95 (35)	111 (44)	113 (45)	95 (35)	113 (45)
Temperature at boiler return temperature of 140°F (60°C)	°F (°C)	144 (62)	145 (63)	151 (66)	149 (65)	145 (63)	149 (65)
Flue gas value							
Mass flow rate (of flue gas)							
- at rated full load	lbs/h	86.9	126.0	155.9	207.0	147.0	207.0
	kg/h	39.4	57.1	70.7	93.9	66.7	93.9
- at rated partial load	lbs/h	8.9	13.0	16.1	20.8	13.0	20.8
	kg/h	4.0	5.9	7.3	9.4	5.9	9.4
Available draught	Pa	250	250	250	250	114	250
	mbar	2.5	2.5	2.5	2.5	1.14	2.5
Flue gas temperature sensor limit	°F	230	230	230	230	230	230
	°C	(110)	(110)	(110)	(110)	(110)	(110)
Average condensate flow rate *6							
with natural gas							
- T_S/T_R = 122 / 86°F (50 / 30°C)	USG/day	20.3	27.9	34.9	46.9	27.9	46.9
	L/day	76.8	105.6	132.0	177.6	124.8	196.8
Condensate connection *7	hose nozzle Ø in	¾ in	¾ in	¾ in	¾ in	¾ in	¾ in
Boiler flue gas connection *8	Ø in (mm)	3 (80)	3 (80)	3 (80)	3 (80)	3 (80)	3 (80)
Combustion air supply connection *8 coaxial outer	Ø in (mm)	5 (125)	5 (125)	5 (125)	5 (125)	5 (125)	5 (125)
single		3 (80)	3 (80)	3 (80)	3 (80)	3 (80)	3 (80)
Noise level (at 1 meter)							
- at full load	(dB)	52	59	51	55	59	55
- at partial load	(dB)	34	34	31	31	34	31
NOx @ 3% O_2 *9		< 20 ppm					
Communication Module (integral)							
WiFi Frequency Band	MHz	2400 to 2483.5					
Maximum Transmission Power	dBm	15					
Lower Power Radio Frequency Band	MHz	2400 to 2483.5					
Maximum Transmission Power	dBm	6					

*5 Measured flue gas temperature with a combustion air temperature of 68°F (20°C).
*6 Based on typical boiler cycles, including partial load conditions.
*7 Requires ¾ in. (19 mm) tubing. See Vitodens 100-W Installation Instructions for details.
*8 For detailed information refer to the Vitodens Venting System Installation Instructions.
*9 The Vitodens 100 B1HE/B1KE boilers are certified to the requirements of South Coast Air Quality Management District (SCAQMD) Rule 1146.2, Bay Area Air Quality Management District (BAAQMD) Regulation 9 Rule 6, and San Juaquin Valley Air Pollution Control District (SJVAPCD) Rule 4308.

Technical Data *(continued)*

B1KE on demand hot water operation

Boiler Model No.		B1KE-120	B1KE-199
Max. Input NG and LPG (DHW production only)	MBH kW	140 41.0	199 58.3
Max. boiler temperature (during DHW production)	°F (°C)	180 (82)	180 (82)
DHW supply temperature	°F (°C)	140 (60)	140 (60)
Continuous draw rate *1 at Δ t = 77°F (43K)	USG/min. (L/h)	3.3 757	4.7 1070
Max. flow through heat exchanger	USG/min. (L/h)	3.7 (840)	5.3 (1200)
Maximum allowable working pressure (potable water)	psi	150	150
Test pressure	psi	300	300

*1 DCW and DHW temperature rise would be proportional. Maximum DHW supply temperature is 140°F (60°C).

Parts List

Boiler Model No.	Serial No.
B1HE-85	7722772□□□□□□□□□
B1HE-120	7722773□□□□□□□□□

Ordering Parts:
Please provide Serial Number
ordering replacement parts. O
components from your Viessn

0001 Casing
0002 Cable Set
0003 Hydraulic System
0004 Heat Cell
0005 Other
0006 Electronic Equipment
0007 Programming Unit

Ⓐ Rating plate with serial nu

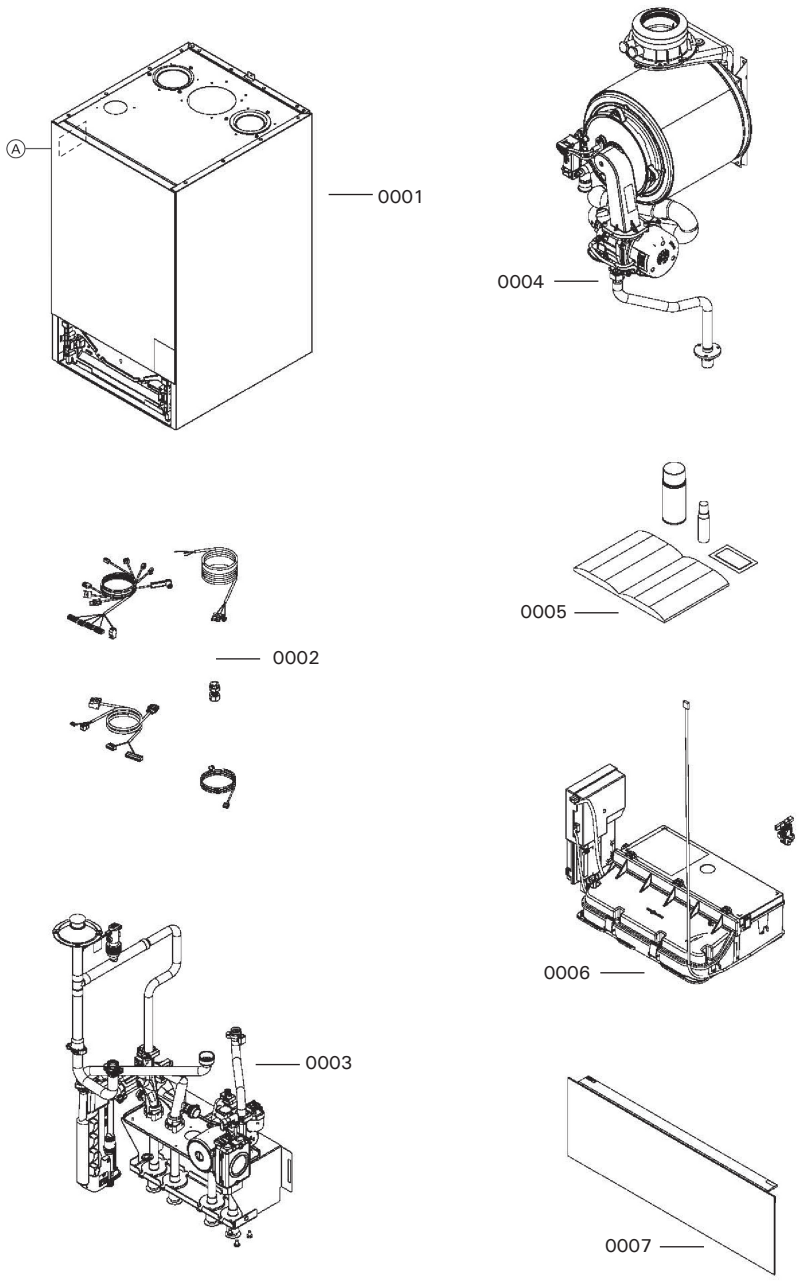

Parts List *(continued)*

Boiler Model No.	Serial No.
B1KE-120	7722776□□□□□□□□□

Ordering Parts:
Please provide Serial Number Ⓐ when ordering replacement parts. Order replacement components from your Viessmann distributor.

0001 Casing
0002 Cable Set
0003 Hydraulic System
0004 Heat Cell
0005 Other
0006 Electronic Equipment
0007 Programming Unit

Ⓐ Rating plate with serial number

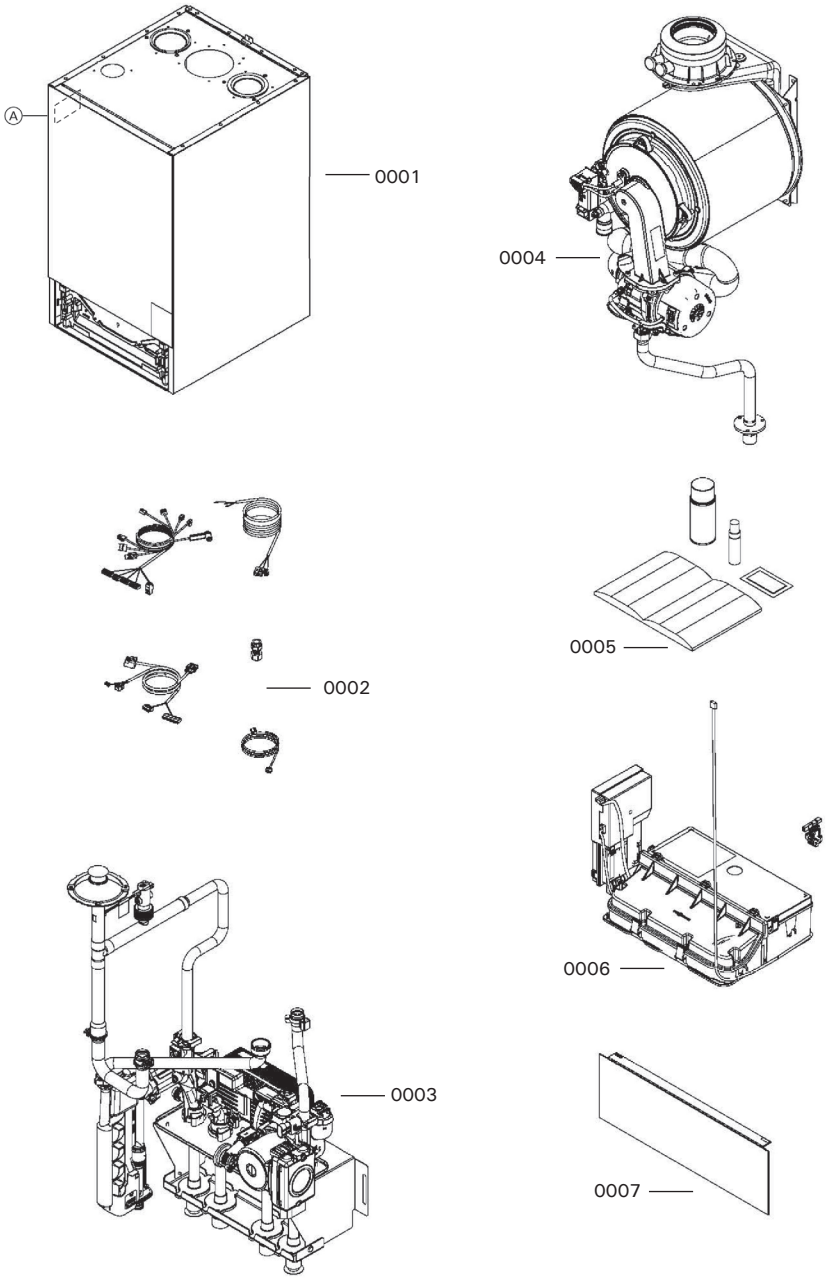

Parts List *(continued)*

Boiler Model No.	Serial No.
B1HE-150	7722774□□□□□□□□□
B1HE-199	7722775□□□□□□□□□

Ordering Parts:
Please provide Serial Number Ⓐ when ordering replacement parts. Order replacement components from your Viessmann distributor.

0001 Casing
0002 Cable Set
0003 Hydraulic System
0004 Heat Cell
0005 Other
0006 Electronic Equipment
0007 Programming Unit

Ⓐ Rating plate with serial number

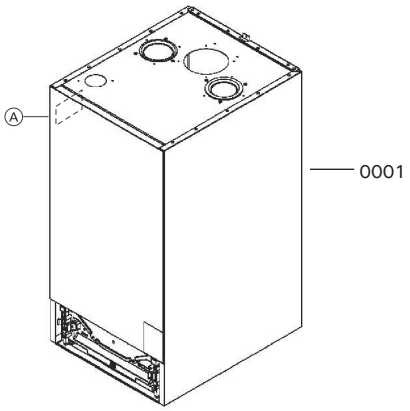

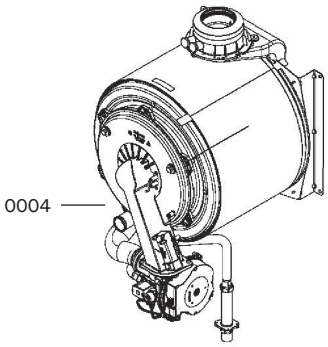

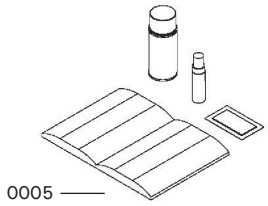

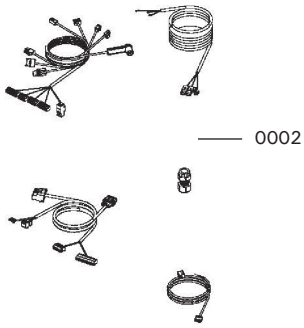

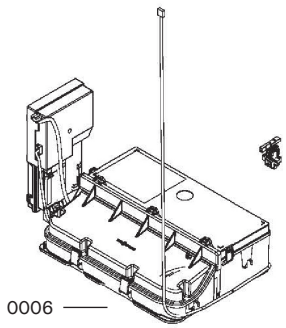

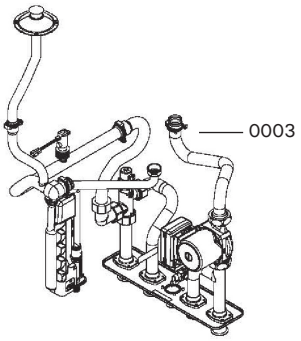

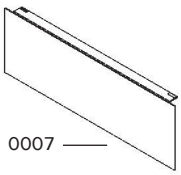

Parts List *(continued)*

Boiler Model No.	Serial No.
B1KE-199	7722777□□□□□□□□□

Ordering Parts:
Please provide Serial Number Ⓐ when ordering replacement parts. Order replacement components from your Viessmann distributor.

0001 Casing
0002 Cable Set
0003 Hydraulic System
0004 Heat Cell
0005 Other
0006 Electronic Equipment
0007 Programming Unit

Ⓐ Rating plate with serial numb

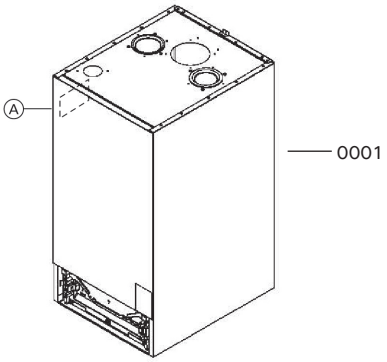

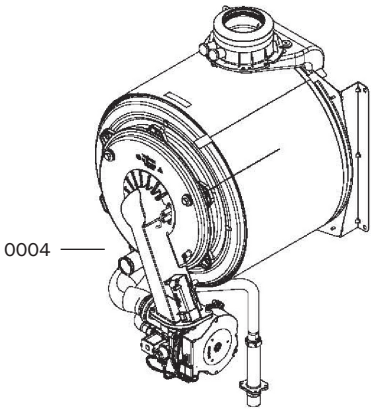

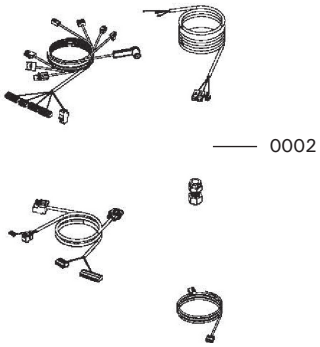

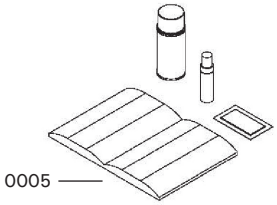

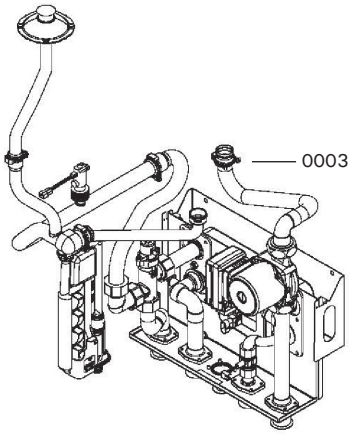

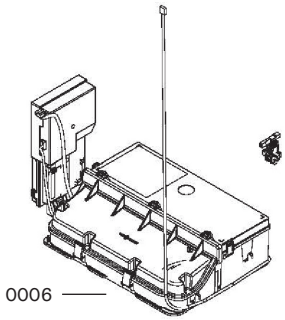

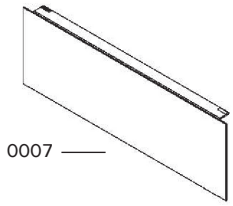

Parts List *(continued)*

Boiler Model No.	Serial No.
B1HE-85	7722772□□□□□□□□
B1HE-120	7722773□□□□□□□□
B1HE-150	7722774□□□□□□□□
B1HE-199	7722775□□□□□□□□
B1KE-120	7722776□□□□□□□□
B1KE-199	7722777□□□□□□□□

Ordering Parts:
Please provide Serial Number when ordering replacement parts. Order replacement components from your Viessmann distributor.

Casing
0001 Front cover
0002 Seal cover
0003 Seal profile
0004 Hinge
0005 Hinge bottom (2 pcs)
0006 Diaphragm grommet 88.9 mm
0007 Diaphragm grommet 80 mm
0008 Ventilation cover
0009 Center clip (2 pcs)
0010 Cable inlet grommets (2 pcs)
0011 Screw EJOT (6 pcs)

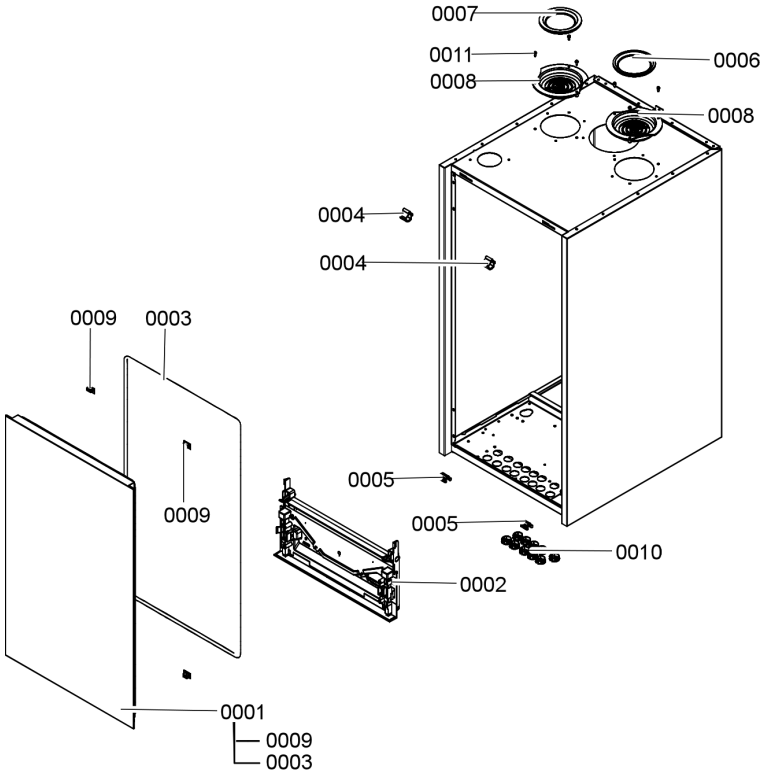

Parts List *(continued)*

Boiler Model No.	Serial No.
B1HE-85	7722772□□□□□□□□
B1HE-120	7722773□□□□□□□□
B1KE-120	7722776□□□□□□□□

Ordering Parts:
Please provide Serial Number when ordering replacement parts. Order replacement components from your Viessmann distributor.

Heat Cell
0001 Heat exchanger
0002 Connection elbow HV
0003 Connection elbow HR
0004 Gasket set connection elbow
0005 Insulation block
0006 Boiler flue connection 80/125
0007 Flow sensor (Duplex)
0008 Flue gas sensor
0009 Flue gas gasket DN80
0010 Flue duct and gaskets
0011 Grommet DN80
0012 Cap plug boiler flue connection
0013 O-ring connected piping
0014 Ventilation cover
0015 Burner door screws
0016 Burner door gaskets
0017 ETT heat exchanger pack
0018 Burner

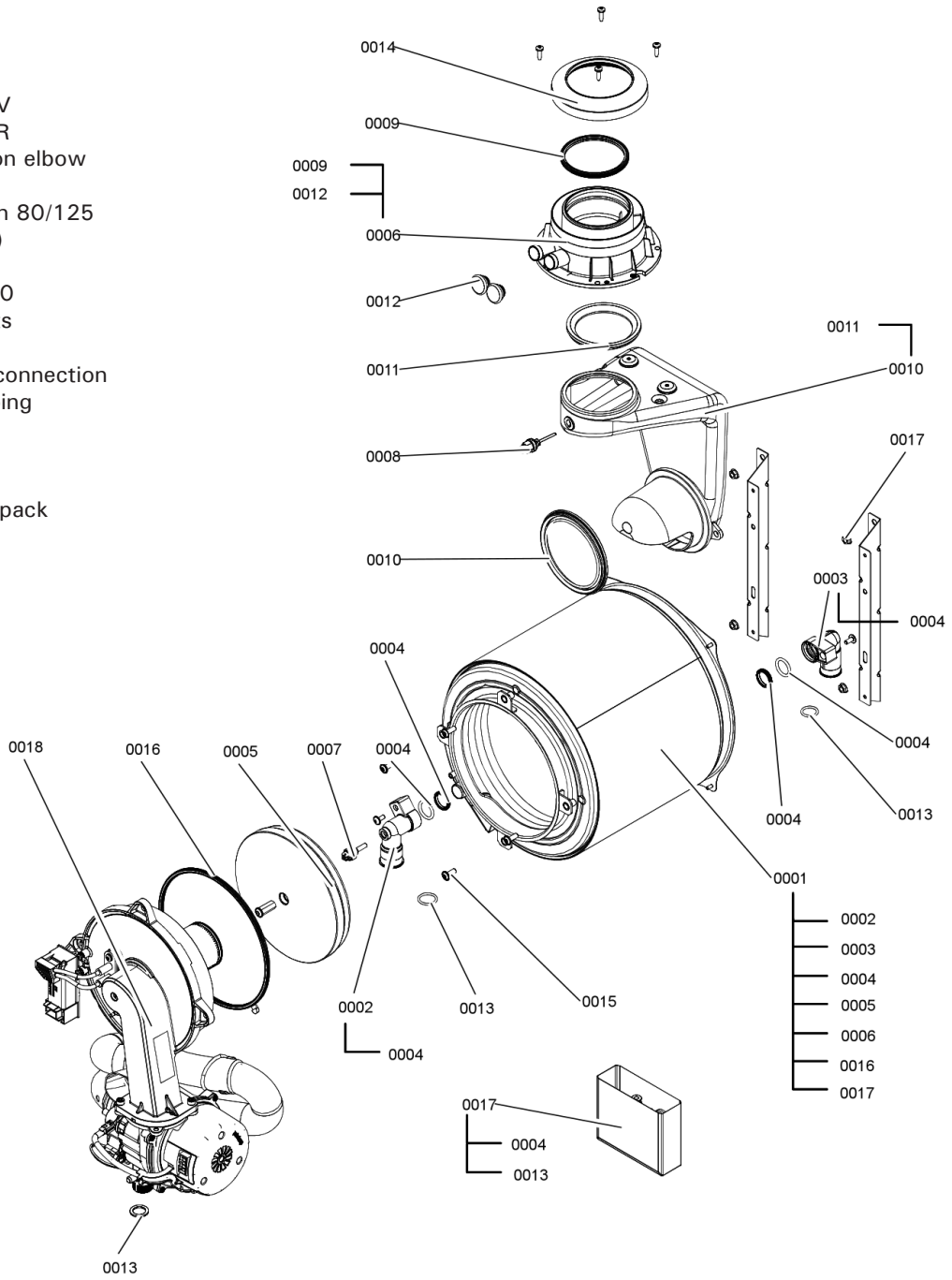

6167 818 - 22

Parts List *(continued)*

Boiler Model No.	Serial No.
B1HE-150	7722774□□□□□□□□□
B1HE-199	7722775□□□□□□□□□
B1KE-199	7722777□□□□□□□□□

Ordering Parts:
Please provide Serial Number when ordering replacement parts. Order replacement components from your Viessmann distributor.

Heat Cell
000A Non-replacable component
0001 Connection elbow
0002 Gasket set connection elbow
0003 Thermal insulation block separation plate
0004 Boiler flue connection 80/125
0005 Temperature sensor
0006 Flue gas temperature sensor
0007 Flue gas gasket DN80
0008 Grommet DN80
0009 Cap plug boiler connection
0010 Gasket set pipework
0011 Ventilation cover
0012 Burner door screws (6 pcs)
0013 Burner door seal
0014 Burner

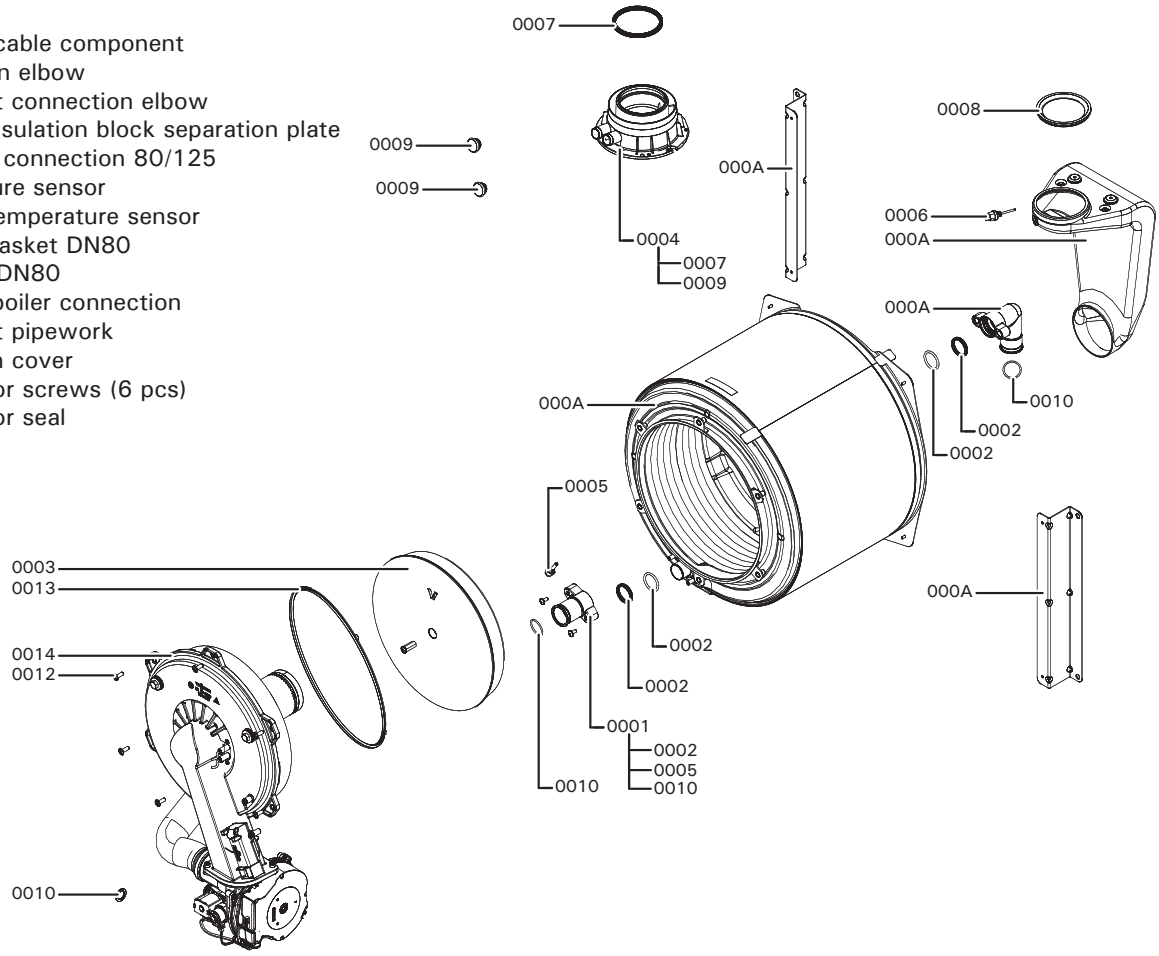

Parts List *(continued)*

Boiler Model No.	Serial No.
B1HE-85	7722772□□□□□□□□□
B1HE-120	7722773□□□□□□□□□
B1KE-120	7722776□□□□□□□□□

Ordering Parts:
Please provide Serial Number when ordering replacement parts. Order replacement components from your Viessmann distributor.

Burner

0001 Cylinder flame body Matrix Plus
0002 Thermal insulation ring with Mutlitherm
0003 Gasket set incl. screws
0004 Burner door
0005 Ignition transformer
0006 Blade terminal (5 pcs)
0007 Ignition electrode gasket
0008 Ignition electrode
0009 IO electrode gasket
0010 IO electrode
0011 Diaphragm backflow protection
0012 Radial fan 120V
0013 Gasket A 17 x 24 (5 pcs)
0014 Venturi extension
0015 Maintenance kit

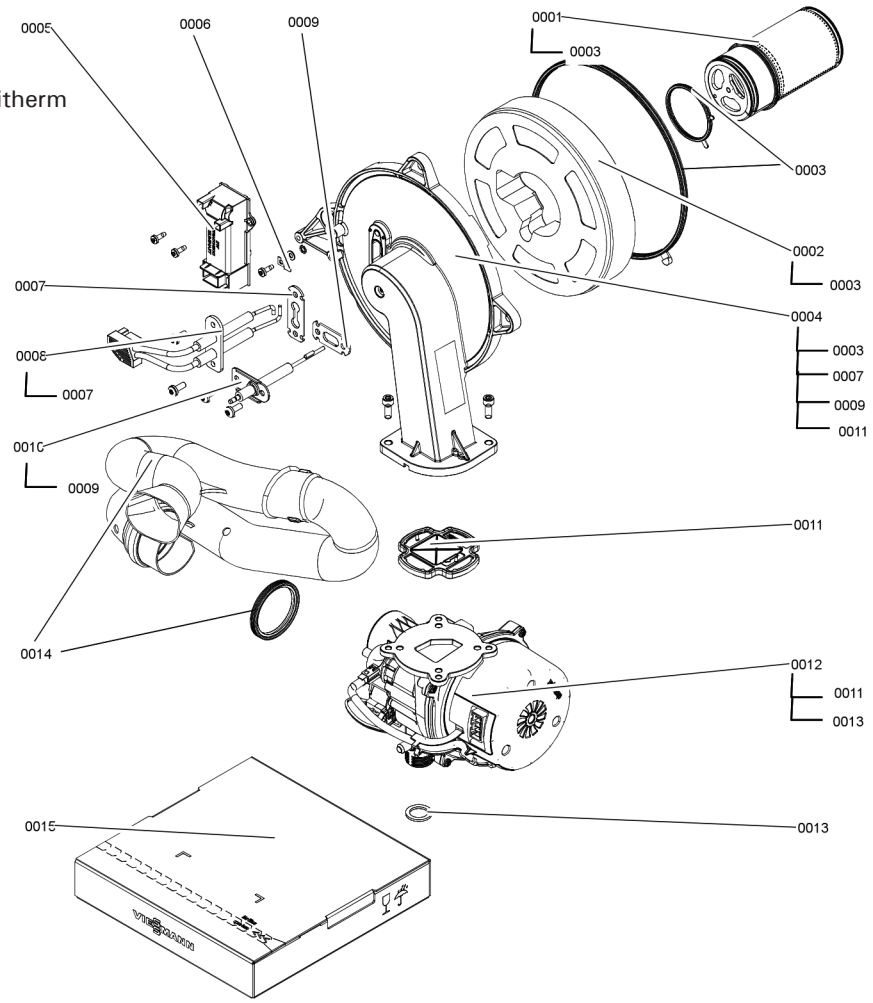

Parts List *(continued)*

Boiler Model No.	Serial No.
B1HE-150	7722774□□□□□□□□
B1HE-199	7722775□□□□□□□□
B1KE-199	7722777□□□□□□□□

Ordering Parts:
Please provide Serial Number when ordering replacement parts. Order replacement components from your Viessmann distributor.

Burner

0001	Flame body assembly
0002	Thermal insulation ring
0003	Burner door
0004	Ignition transformer
0005	Ignition + IO electrode gasket (3 pcs)
0006	Ignition electrode block
0007	FK gasket
0008	Ionization electrode
0009	Membrane non-return device
0010	Radial Fan 120V
0011	Blade terminal (5 pcs)
0012	Seal rings pack (9 pcs)
0013	Venturi extension
0014	Maintenance kit
0015	Burner door seal HCG57

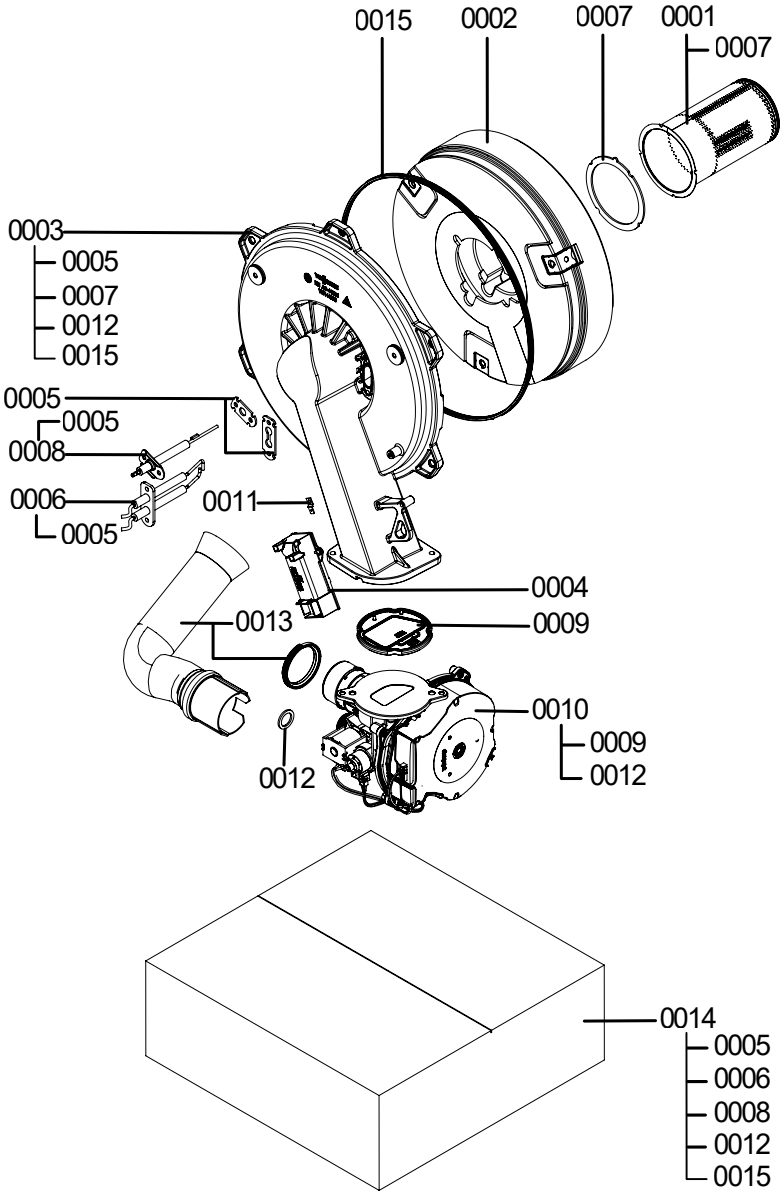

Parts List *(continued)*

Boiler Model No.	Serial No.
B1HE-85	7722772□□□□□□□□□
B1HE-120	7722773□□□□□□□□□

Ordering Parts:
Please provide Serial Number when ordering replacement parts. Order replacement components from your Viessmann distributor.

Hydraulic System

0001 Diaphragm grommet
0002 Hydraulics flow pipe
0003 VT flow pipe with O-rings
0004 Connection pipe return CA
0005 Condensate hose
0006 Meander Siphon
0007 Siphon holder
0009 Hydraulics connection pipe
0010 Air box hydraulics gasket (4 pcs)
0011 Screw PT 50 x 14 (5 pcs)
0012 Gasket A 17 x 24 (5 pcs)
0013 Spring clip d = 25
0014 Connector fittings (2 pcs)
0015 Self-tapping screw (5 pcs)
0016 Round head screw (5 pcs)
0017 Pump Module
0018 O-Ring (5pcs)
0019 Seal set O-Ring (5 pcs)
0020 O-Ring (5pcs)
0021 Condensate hose
0022 Cable tie (5 pcs)

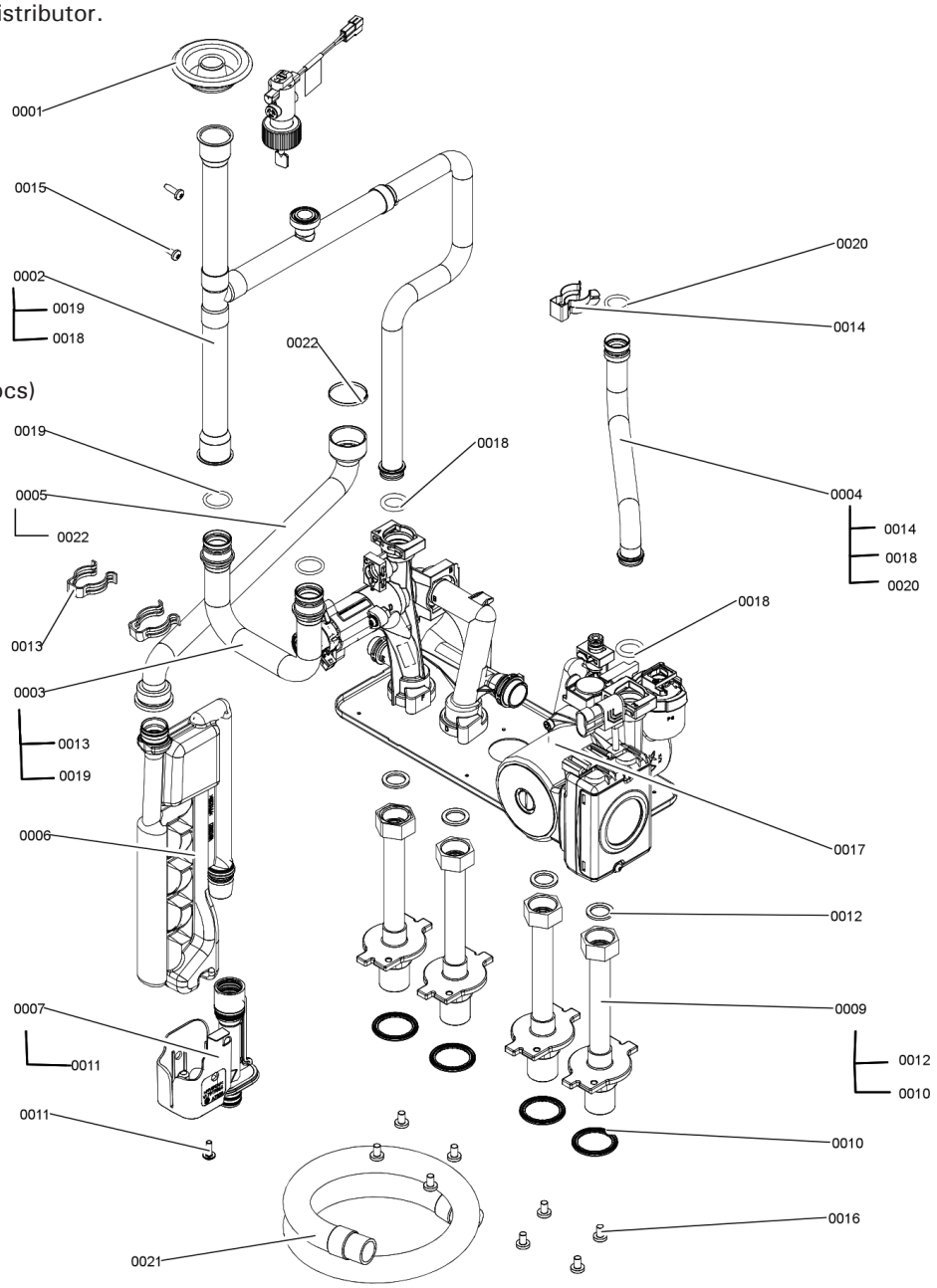

Parts List *(continued)*

Boiler Model No.	Serial No.
B1KE-120	7722776□□□□□□□□□

Ordering Parts:
Please provide Serial Number when ordering replacement parts. Order replacement components from your Viessmann distributor.

Hydraulic System

0001 Diaphragm grommet
0002 Hydraulics flow pipe
0003 VT flow pipe with O-rings
0004 Connection pipe return
0005 Condensate hose WT
0006 Meander Siphon
0007 Siphon holder
0009 Hydraulics connection pipe
0010 Air box hydraulics gasket (4 pcs)
0011 Screw (5 pcs)
0012 Gasket (5 pcs)
0013 Spring clip d = 25
0014 Connector fittings (2 pcs)
0015 Self-tapping screw (5 pcs)
0016 Round head screw (5 pcs)
0017 Pump Module
0018 O-Ring (5pcs)
0019 Seal set O-Ring (5 pcs)
0020 O-Ring (5 pcs)
0021 Condensate hose
0022 Cable tie (5 pcs)

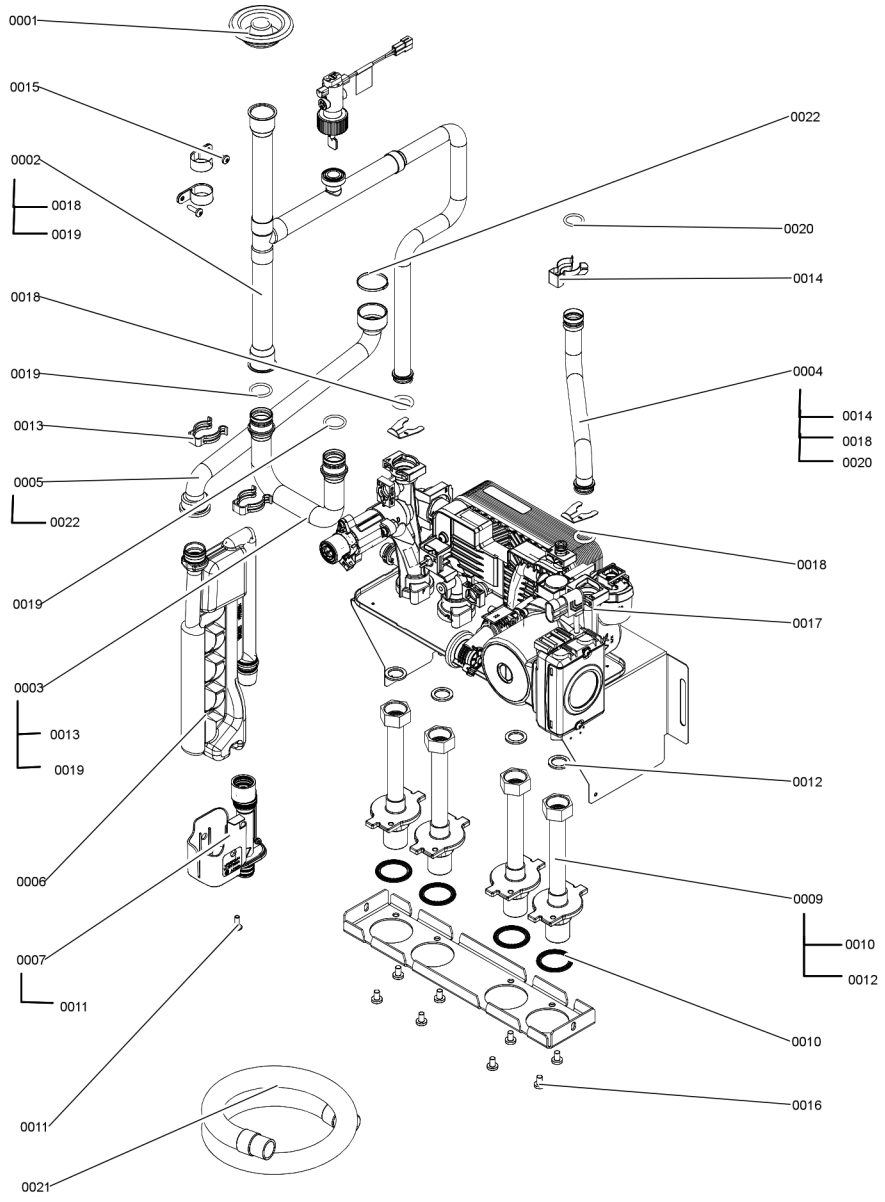

Parts List *(continued)*

Boiler Model No.	Serial No.
B1HE-150	7722774□□□□□□□□□
B1HE-199	7722775□□□□□□□□□

Ordering Parts:
Please provide Serial Number when ordering replacement parts. Order replacement components from your Viessmann distributor.

Hydraulic System

0001 Connection pipe
0002 Diaphragm grommet
0003 Connection pipe
0004 Connection pipe HR circulation
0005 Connection pipe HV circulation bottom
0006 Angle piece G1 1/4 - G1 1/4
0007 Condensate hose
0008 Meander Siphon
0009 Siphon holder
0010 Screw (5 pcs)
0012 Self-tapping screw (5 pcs)
0013 Spring clip d = 25
0014 Gaskets and O-rings
0015 Gasket set 1 1/4" (5 pcs)
0016 Pump Module
0017 Seal set O-Ring (5 pcs)
0018 O-Ring
0019 Air box hydraulics gasket (4 pcs)
0020 Screw pack
0021 Condensate hose
0022 Cable tie (5 pcs)

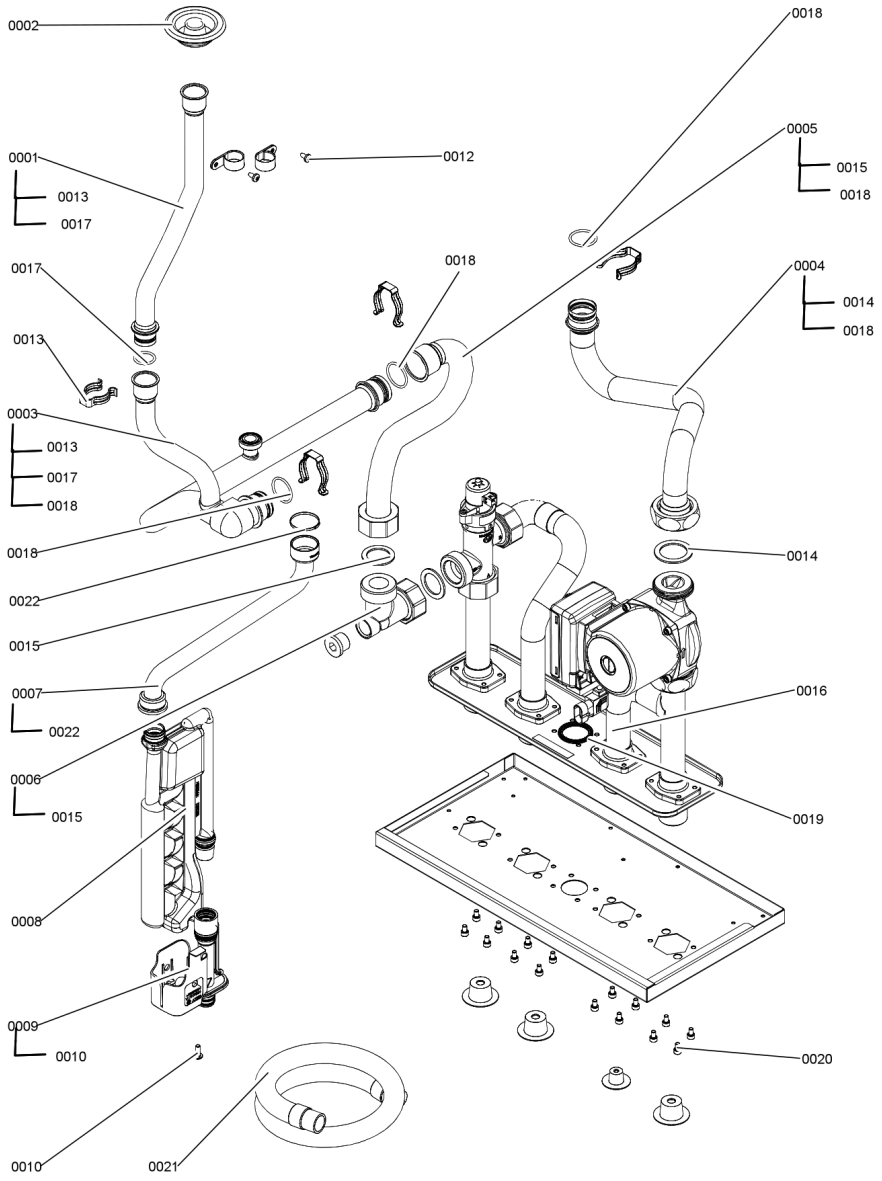

Parts List *(continued)*

Boiler Model No.	Serial No.
B1KE-199	7722777□□□□□□□□□

Ordering Parts:
Please provide Serial Number when ordering replacement parts. Order replacement components from your Viessmann distributor.

Hydraulic System
0001 Connection pipe
0002 Diaphragm grommet
0003 Connection pipe
0004 Connection pipe HR combi
0005 Connection pipe HV combi bottom
0006 Angle piece G1 1/4 - G1 1/4
0007 Condensate hose
0008 Meander Siphon
0009 Siphon holder
0010 Screw (5 pcs)
0012 Self-tapping screw (5 pcs)
0013 Spring clip d = 25
0014 Gaskets and O-rings
0015 Gasket set 1 1/4″ (5 pcs)
0016 Pump Module
0017 Seal set O-Ring (5 pcs)
0018 O-Ring
0019 Air box hydraulics gasket (4 pcs)
0020 Screw pack (TD)
0021 Condensate hose
0022 Cable tie (5 pcs)

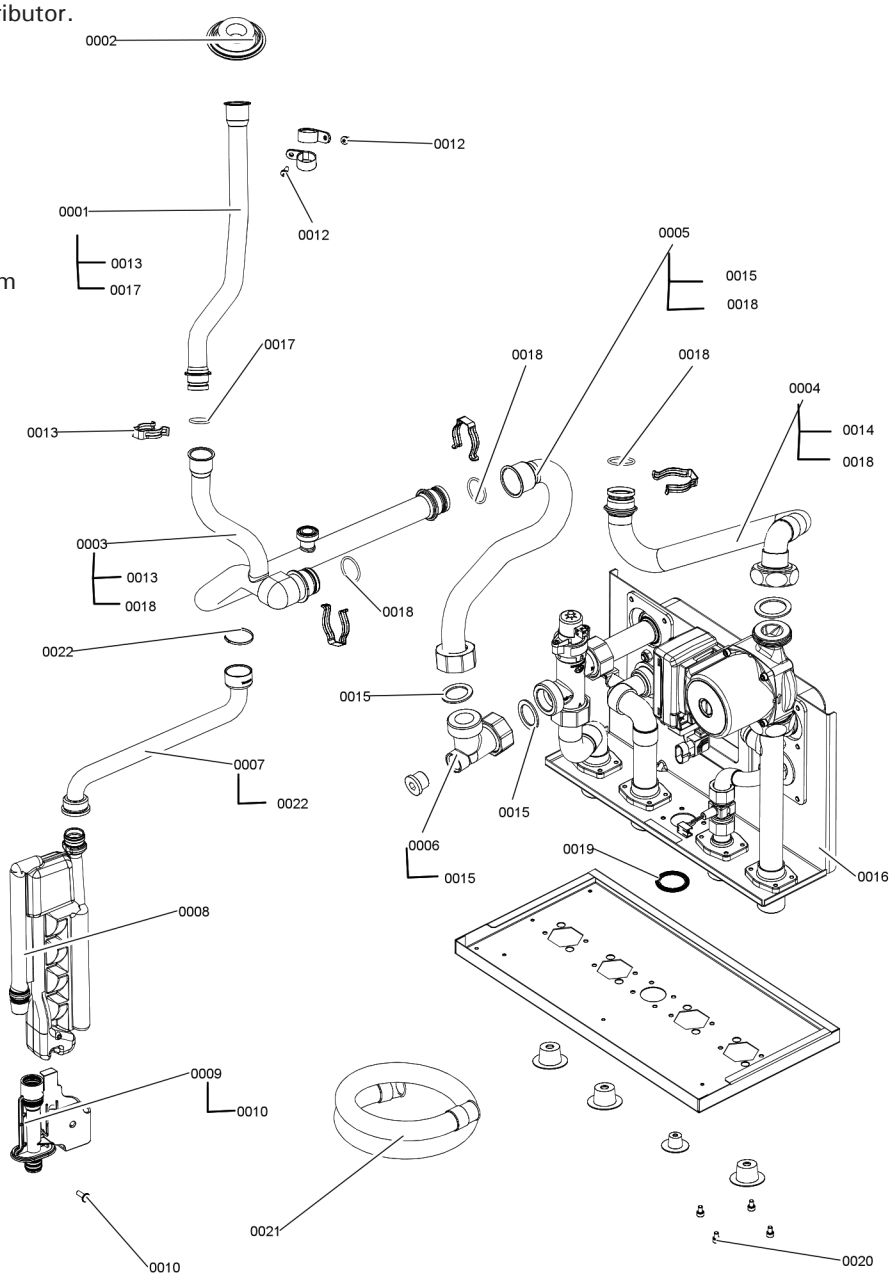

Parts List *(continued)*

Boiler Model No.	Serial No.
B1HE-85	7722772□□□□□□□□
B1HE-120	7722773□□□□□□□□

Ordering Parts:
Please provide Serial Number when ordering replacement parts. Order replacement components from your Viessmann distributor.

Pump Module
0001 Round seal ring (5 pcs)
0002 O-Rings (5 pcs)
0003 Screw (5 pcs)
0004 Valve insert
0005 O-Ring (5 pcs)
0006 Connector G3/4
0007 Fuse clip nipple connection
0008 Compact carrier sheet hydraulics
0009 Circulation adapter
0010 Circulation adapter return flow side
0011 Clip D = 24 (5 pcs)
0012 Screw EJOT (5 pcs)
0013 Plug D = 8/D = 10
0014 Clip D = 8 small (5pcs)
0015 Return flow housing with cap and plug
0016 Circulation pump motor 115V
0017 Flow housing
0018 Flow switch
0019 Gasket set

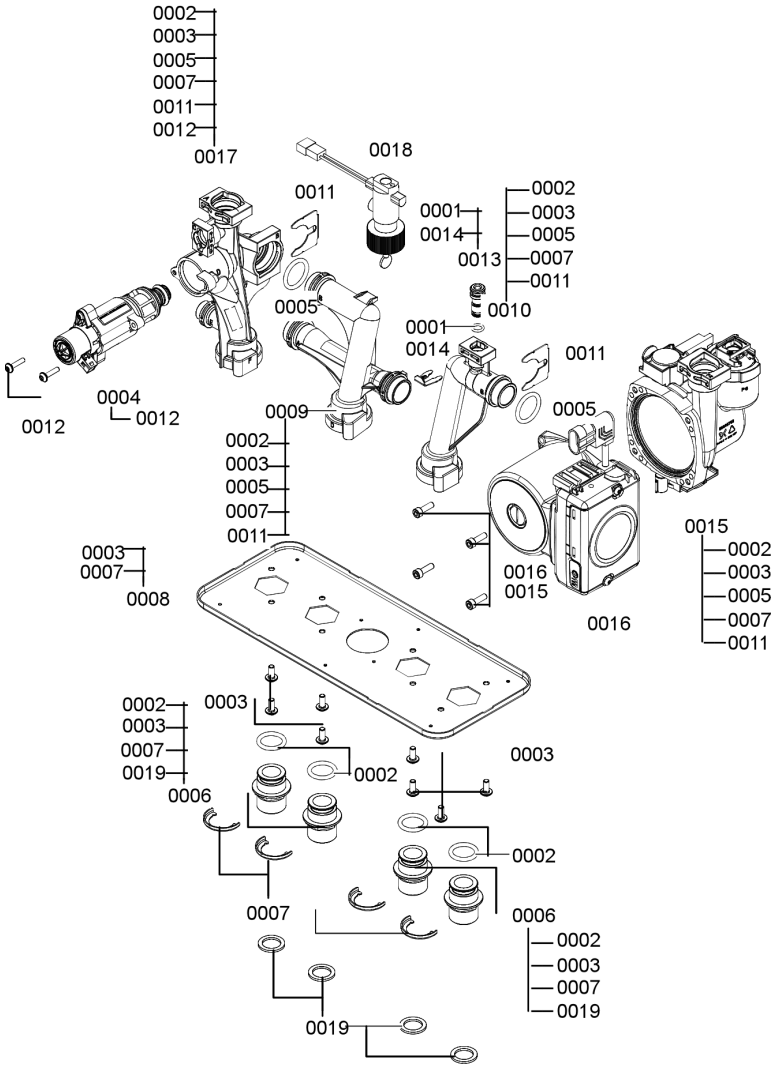

Parts List *(continued)*

Boiler Model No.	Serial No.
B1KE-120	7722776□□□□□□□□□

Ordering Parts:
Please provide Serial Number when ordering replacement parts. Order replacement components from your Viessmann distributor.

Pump Module

0001 Clip D = 8 small (5 pcs)
0002 Round seal ring (5 pcs)
0003 O-Rings (5 pcs)
0004 Screw (5 pcs)
0005 Valve insert
0006 Flow sensor
0007 O-Ring (5 pcs)
0008 Safety pin (2 pcs)
0009 NTC temperature sensor VA -30... + 125 °C
0010 Plate heat exchanger
0011 Profile seal
0012 Flow regulator
0013 Connector G3/4
0014 Fuse clip nipple connection
0015 Compact carrier sheet hydraulics
0016 Adapter PWT compact
0017 Clip D = 24 (5 pcs)
0018 Screw EJOT (5 pcs)
0019 Round head screw (5 pcs)
0020 Plug D = 8/D = 10
0021 Return flow housing with cap and plug
0022 Circulation pump motor 115V
0023 Flow housing
0024 Flow switch
0025 Gasket set

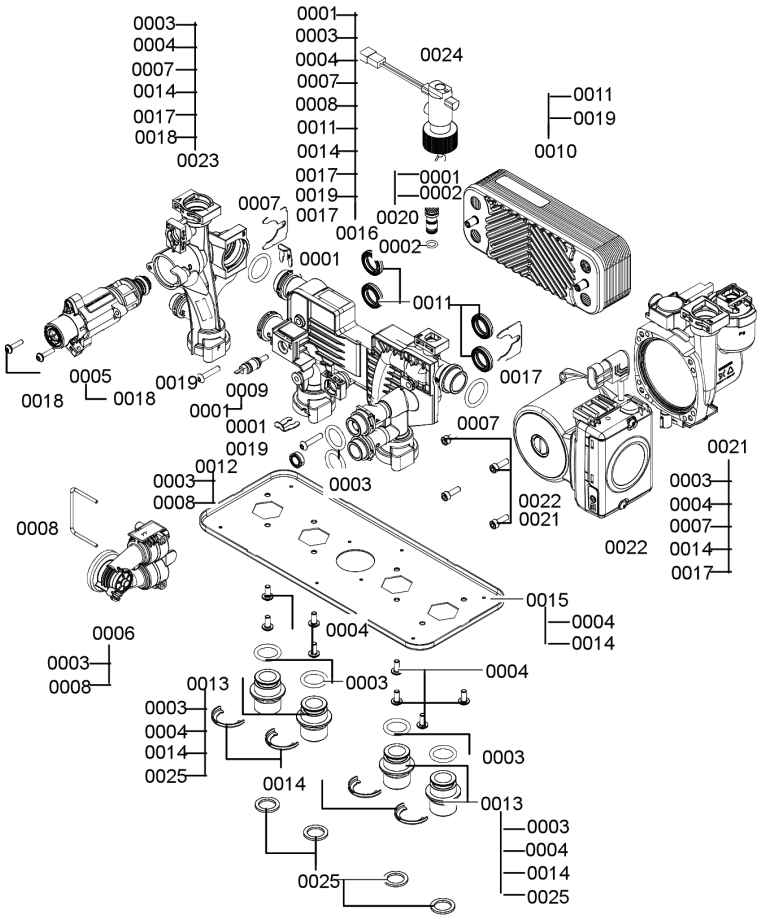

Parts List *(continued)*

Boiler Model No.	Serial No.
B1HE-150	7722774□□□□□□□□□
B1HE-199	7722775□□□□□□□□□

Ordering Parts:
Please provide Serial Number when ordering replacement parts. Order replacement components from your Viessmann distributor.

Pump Module

0001 3-Way Diverter valve
0002 Gasket set (5 pcs)
0003 Gasket set (5 pcs)
0004 Pump 115V
0005 Circulation pump motor 115V
0006 Flow switch
0007 Hydraulic module

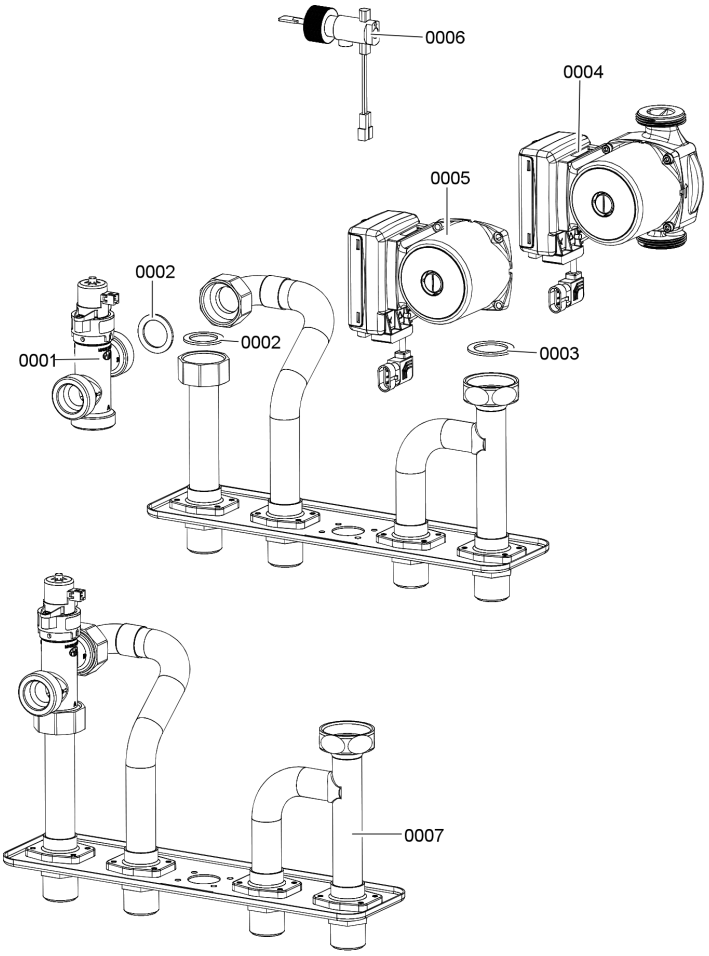

Parts List *(continued)*

Boiler Model No.	Serial No.
B1KE-199	7722777□□□□□□□□□

Ordering Parts:
Please provide Serial Number when ordering replacement parts. Order replacement components from your Viessmann distributor.

Pump Module

0001 Flow sensor DN15
0002 3-Way diverter valve
0003 Gasket set (5 pcs)
0004 Gasket (5 pcs)
0005 Gasket set (2 pcs)
0006 Gasket set (5 pcs)
0007 RV cartridge (non-return valve)
0008 Flow regulator
0009 Potable water sensor short (Clip D = 8)
0010 Clip D = 8 (5 pcs)
0011 Pump 115V
0012 Circulation pump motor 115V
0013 PWT B10TH16 with threaded bolt
0014 Profile seal
0015 Flow switch
0016 Hydraulic module

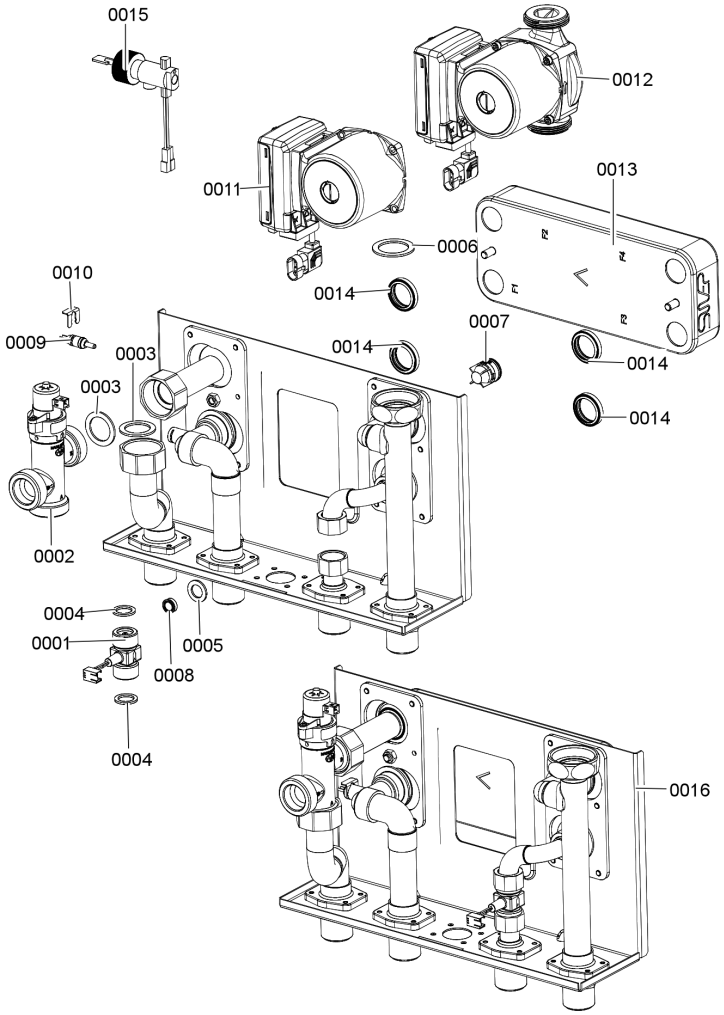

Parts List *(continued)*

Boiler Model No.	Serial No.
B1HE-85	7722772□□□□□□□□
B1HE-120	7722773□□□□□□□□
B1HE-150	7722774□□□□□□□□
B1HE-199	7722775□□□□□□□□
B1KE-120	7722776□□□□□□□□
B1KE-199	7722777□□□□□□□□

Ordering Parts:
Please provide Serial Number when ordering replacement parts. Order replacement components from your Viessmann distributor.

Electronic Equipment

0001 BCU
0002 Cover
0003 Rear cover
0004 Base enclosure
0005 Cable
0006 Cable set
0007 Front Cover
0008 Divider
0009 Plug Sset
0010 Clip
0011 Power switch

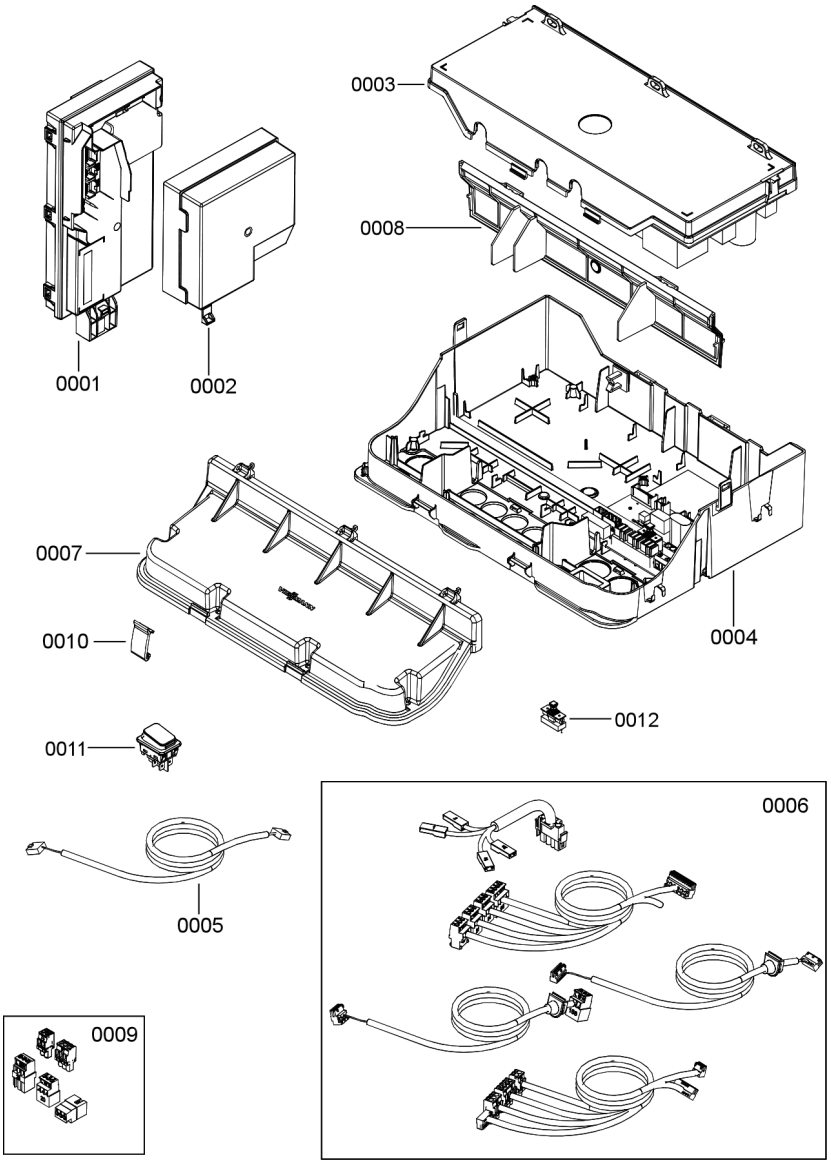

Parts List *(continued)*

Boiler Model No.	Serial No.
B1HE-85	7722772□□□□□□□□
B1HE-120	7722773□□□□□□□□
B1HE-150	7722774□□□□□□□□
B1HE-199	7722775□□□□□□□□
B1KE-120	7722776□□□□□□□□
B1KE-199	7722777□□□□□□□□

Ordering Parts:
Please provide Serial Number when ordering replacement parts. Order replacement components from your Viessmann distributor.

Cable Set
0001 Wiring harness low voltage
0002 Wiring harness 120V
0003 Power cable
0004 Cable gland
0005 Cable 10-pin twisted L = 1300

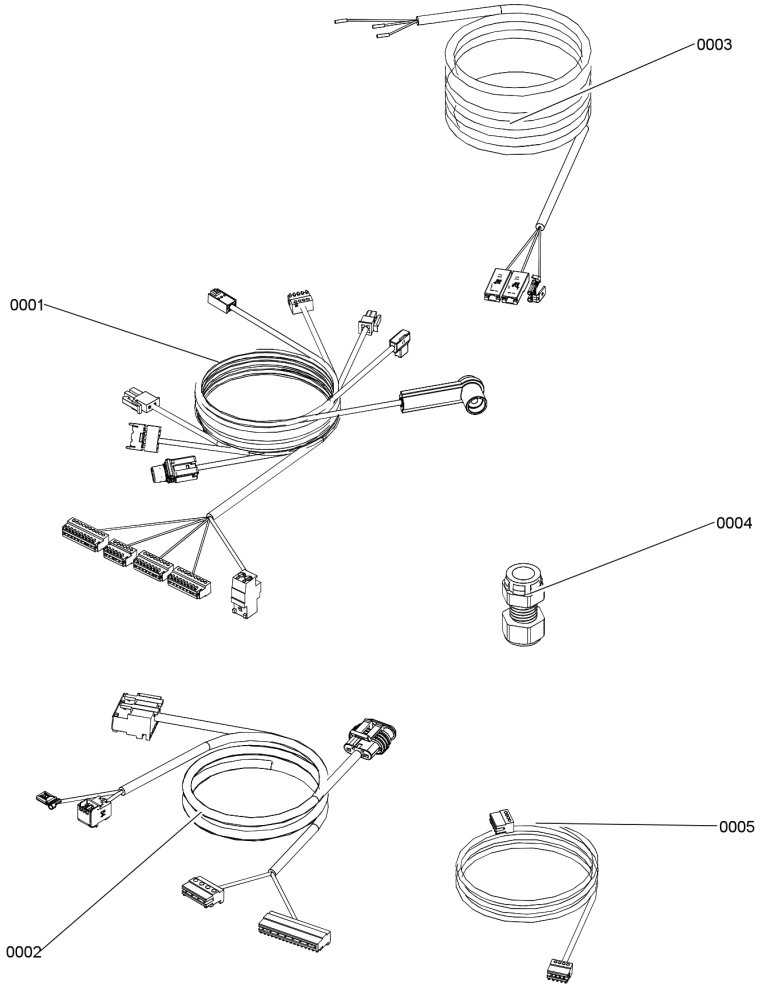

Parts List *(continued)*

Boiler Model No.	Serial No.
B1HE-85	7722772□□□□□□□□
B1HE-120	7722773□□□□□□□□
B1HE-150	7722774□□□□□□□□
B1HE-199	7722775□□□□□□□□
B1KE-120	7722776□□□□□□□□
B1KE-199	7722777□□□□□□□□

Ordering Parts:
Please provide Serial Number when ordering replacement parts. Order replacement components from your Viessmann distributor.

Programming Unit
0001 Human Machine Interface HMI-P 3.5″ 450
0002 Telemetric Control Unit (TCU200)
0003 Ribbon cable Wifi module
0004 Fiber optic HMI 450

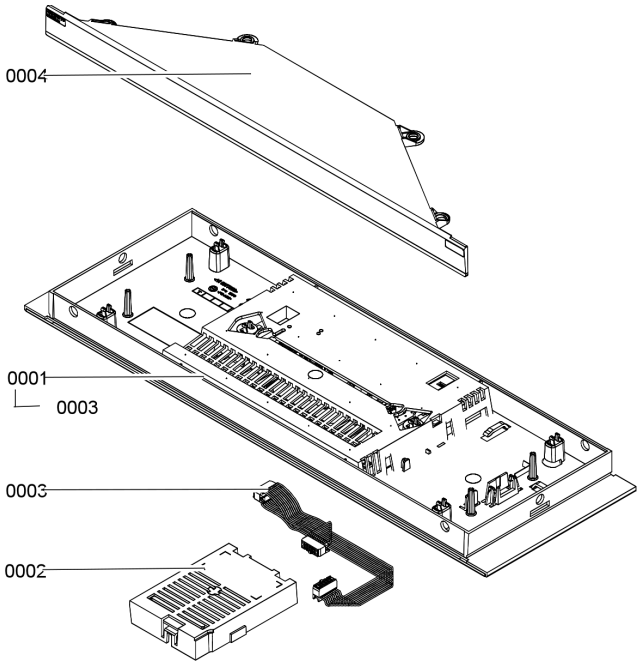

Parts List *(continued)*

Boiler Model No.	Serial No.
B1HE-85	7722772□□□□□□□□
B1HE-120	7722773□□□□□□□□
B1HE-150	7722774□□□□□□□□
B1HE-199	7722775□□□□□□□□
B1KE-120	7722776□□□□□□□□
B1KE-199	7722777□□□□□□□□

Ordering Parts:
Please provide Serial Number when ordering replacement parts. Order replacement components from your Viessmann distributor.

Other
0001 Technical Documentation
0002 Lubricant
0003 Vitowhite spray paint 150 ml can
0004 Touch-up paint stick Vitowhite

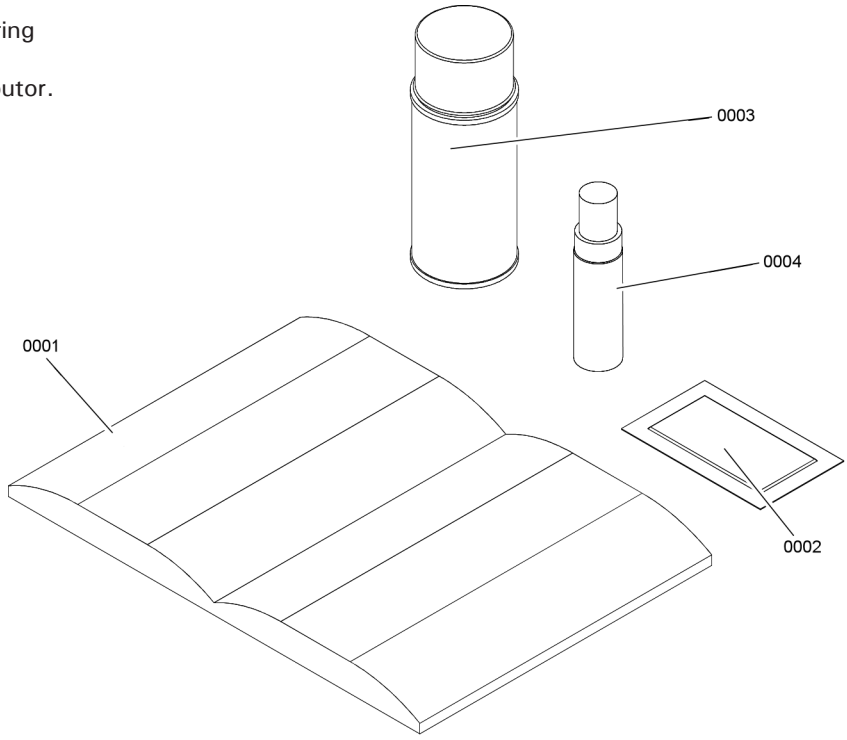

Parts List *(continued)*

Boiler Model No.	Serial No.
B1HE-85	7722772□□□□□□□□
B1HE-120	7722773□□□□□□□□
B1HE-150	7722774□□□□□□□□
B1HE-199	7722775□□□□□□□□
B1KE-120	7722776□□□□□□□□
B1KE-199	7722777□□□□□□□□

Ordering Parts:
Please provide Serial Number when ordering replacement parts. Order replacement components from your Viessmann distributor.

Accessories

0001 Pressure Gauge
0002 Boiler Pressure Relief Valve
0003 Locking Clip
0004 O Ring
0005 Adaptor
0006 Label
0007 Boiler Drain/Fill Valve
0008 DHW Pressure Relief Valve (B1KE Only)
0009 Outdoor Temperature Sensor
0013 Wall Mounting Bracket

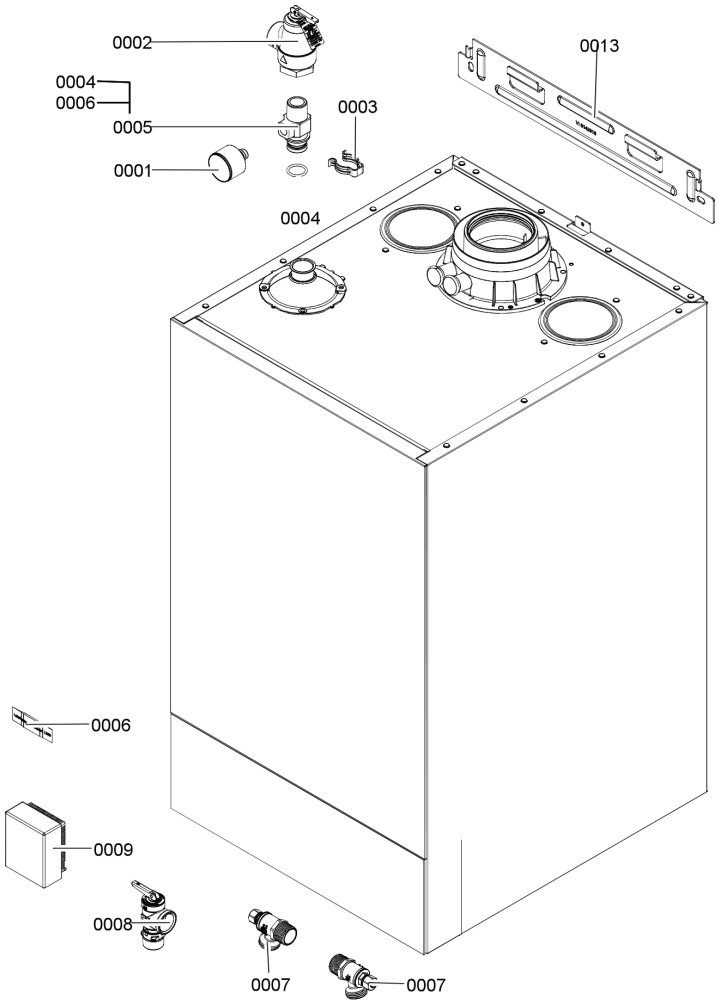

Lighting and Operating Instructions

FOR YOUR SAFETY READ BEFORE OPERATING

W A R N I N G: If you do not follow these instructions exactly, a fire or explosion may result causing property damage, personal injury or loss of life.

A. This boiler does not have a pilot. It is equipped with an ignition device which automatically lights the burner. Do Not try to light the burner by hand.

B. BEFORE OPERATING smell all around the boiler area for gas. Be sure to smell next to the floor because some gas is heavier than air and will settle on the floor.

WHAT TO DO IF YOU SMELL GAS
- Do not try to light any boiler.
- Do not touch any electric switch; do not use any phone in your building.
- Immediately call your gas supplier from a neighbor's phone. Follow the gas supplier's instructions.
- If you cannot reach your gas supplier, call the fire department.

C. Use only your hand to push the main gas supply switch. Never use tools. If the main gas supply switch will operate by hand, don't try to repair it, call a qualified service technician.
Force or attempted repair may result in a fire or explosion.

D. Do not use this boiler if any part has been under water. Immediately call a qualified service technician to inspect the boiler and to replace any part of the control system and any gas control which has been under water.

OPERATING INSTRUCTIONS

1. STOP! Read the safety information above.
2. Set thermostat or other operating control to lowest setting.
3. Turn off all electric power to the boiler.

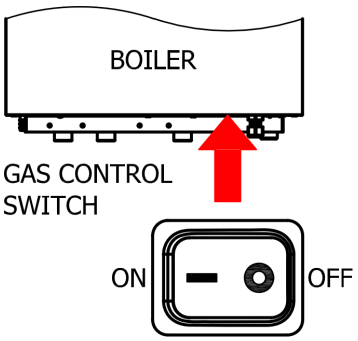

4. This boiler is equipped with an ignition device which automatically lights the burner. Do not try to light the burner by hand.
5. Close main gas shut-off valve.
6. Wait five (5) minutes to clear out any gas. Then smell for gas, including near the floor. If you smell gas, STOP! Follow "B" in the safety information above. If you don't smell gas, go to the next step.
7. Open main gas shut-off valve.
8. Turn on all electric power to the boiler.
9. Set thermostat or other operating control to desired setting.
10. If the boiler will not operate, follow the instructions "To Turn Off Gas To Boiler" and call your service technician or gas supplier.

TO TURN OFF GAS TO BOILER

1. Set thermostat or other operating control to lowest setting.
2. Turn off all electric power to the boiler if service is to be performed.
3. Turn off the control gas switch.

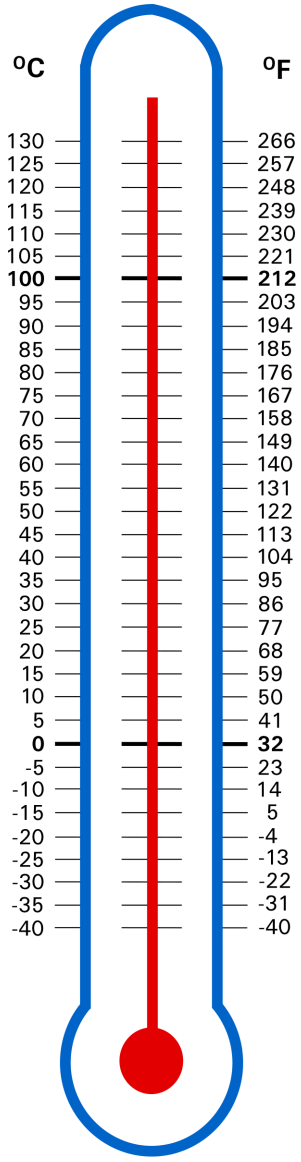

Printed on environmentally friendly (recycled and recyclable) paper.

Technical information subject to change without notice.

Scan for digital copy of this document

Viessmann Manufacturing Company (U.S.) Inc.
45 Access Road
Warwick, Rhode Island · 02886 · USA
TechInfo Line 1-888-484-8643
1-800-288-0667 · Fax (401) 732-0590
www.viessmann-us.com · info@viessmann-us.com

Viessmann Manufacturing Company ULC
750 McMurray Road
Waterloo, Ontario · N2V 2G5 · Canada
TechInfo Line 1-888-484-8643
1-800-387-7373 · Fax (519) 885-0887
www.viessmann.ca · info@viessmann.ca

6167 818 - 22